User Manual

p

gigaBERT700
Generator and Analyzer

070-9393-02

This document supports firmware version 3.0 and above.

Copyright © 1998 Tektronix, Inc. All rights reserved. Licensed software products are owned by Tektronix or its suppliers and are protected by United States copyright laws and international treaty provisions.

Use, duplication, or disclosure by the Government is subject to restrictions as set forth in subparagraph (c)(1)(ii) of the Rights in Technical Data and Computer Software clause at DFARS 252.227-7013, or subparagraphs (c)(1) and (2) of the Commercial Computer Software - Restricted Rights clause at FAR 52.227-19, as applicable.

Tektronix products are covered by U.S. and foreign patents, issued and pending. Information in this publication supersedes that in all previously published material. Specifications and price change privileges reserved.

Printed in the U.S.A.

Tektronix, Inc., P.O. Box 1000, Wilsonville, OR 97070-1000

TEKTRONIX and TEK are registered trademarks of Tektronix, Inc.

WARRANTY

Tektronix warrants that this product will be free from defects in materials and workmanship for a period of one (1) year from the date of shipment. If any such product proves defective during this warranty period, Tektronix, at its option, either will repair the defective product without charge for parts and labor, or will provide a replacement in exchange for the defective product.

In order to obtain service under this warranty, Customer must notify Tektronix of the defect before the expiration of the warranty period and make suitable arrangements for the performance of service. Customer shall be responsible for packaging and shipping the defective product to the service center designated by Tektronix, with shipping charges prepaid. Tektronix shall pay for the return of the product to Customer if the shipment is to a location within the country in which Tektronix service center is located. Customer shall be responsible for paying all shipping charges, duties, taxes, and any other charges for products returned to any other locations.

This warranty shall not apply to any defect, failure or damage caused by improper use or improper or inadequate maintenance and care. Tektronix shall not be obligated to furnish service under warranty a) to repair damage resulting from attempts by personnel other than Tektronix representatives to install, repair or service the product; b) to repair damage resulting from improper user or connection to incompatible equipment; or c) to service a product that has been modified or integrated with other products when the effect of such modification or integration increases the time or difficulty of servicing the product.

THIS WARRANTY IS GIVEN BY TEKTRONIX WITH RESPECT TO THIS PRODUCT IN LIEU OF ANY OTHER WARRANTIES, EXPRESSED OR IMPLIED. TEKTRONIX AND ITS VENDORS DISCLAIM ANY IMPLIED WARRANTIES OF MERCHANTABILITY OR FITNESS FOR A PARTICULAR PURPOSE. TEKTRONIX' RESPONSIBILITY TO REPAIR OR REPLACE DEFECTIVE PRODUCTS IS THE SOLE AND EXCLUSIVE REMEDY PROVIDED TO THE CUSTOMER FOR BREACH OF THIS WARRANTY. TEKTRONIX AND ITS VENDORS WILL NOT BE LIABLE FOR ANY INDIRECT, SPECIAL, INCIDENTAL, OR CONSEQUENTIAL DAMAGES IRRESPECTIVE OF WHETHER TEKTRONIX OR THE VENDOR HAS ADVANCE NOTICE OF THE POSSIBILITY OF SUCH DAMAGES.

How to Reach Customer Service

If you have any questions regarding the operation, maintenance, repair, or application of your Tektronix equipment, contact your local sales and service office. For a complete list of the Worldwide Sales and Service Offices visit our web site.

Tektronix provides high quality Technical Support on applications, operation, measurement specifications, hardware, and software by expert application engineers. For Applications Support, call the Customer Support Center listed below.

Mailing Address	Tektronix, Inc. Measurement Business Division P.O. Box 500 Beaverton, Oregon 97077-0001 USA	Attn. Customer Service
Customer and Sales Support Center	**1-800-833=9200**	Hours are 6:00 AM to 5:00 PM, Pacific Time.
Fax	**503-627-5695**	
E-Mail	support@tek.com	
Web Site	http://www.tektronix.com	

Table of Contents

Safety xii

Getting Started..... 1-1

Scope of this user manual..... 1-2

Initial Self-Check Procedure 1-3

BERT Basics and Features 2-1

BERT Basics..... 2-2

Front & Rear Panel Figures 2-4

Display Formats 2-8

Outputs & Inputs 2-10

Generator OUTPUT 2-10

Generator CLOCK 2-11

Generator Rear Panel..... 2-11

Analyzer INPUT 2-11

Analyzer MONITOR..... 2-12

Analyzer Rear Panel..... 2-12

Connectors, Terminations and Levels 2-14

Controls & Indicators..... 2-16

Power Switches..... 2-16

View Angle and Panel Lock Keys 2-16

GPIB Controls 2-16

Pattern Controls and Function Keys 2-17

Generator CLOCK 2-18

Generator OUTPUT 2-18

Generator ERROR INJECT 2-19

Analyzer INPUT 2-19

Analyzer ERROR DETECTION 2-20

Analyzer SYNC Controls 2-20

Menu Overview..... 2-22

Common Functions 3-1

AC Power..... 3-2

LCD Viewing Angle 3-4

Recalling Default Setup..... 3-5

Locking the Front Panel 3-6
Selecting a Pattern 3-7
Pattern Definitions 3-7
Selecting an Active Pattern 3-7
Selecting (Recalling) a Saved Word, Mark Density or PROM Pattern 3-9
Word Patterns 3-11
Basics 3-11
Creating Word Patterns using front panel 3-12
Creating Word Patterns using menus 3-13
Creating Word Patterns using remote control 3-14
Saving Word Patterns 3-15
Recalling Word Patterns 3-16
Generator Functions 4-1
Clock Source and Frequency 4-2
Data and Clock Outputs 4-5
PYNC and CLOCK/4 Outputs 4-10
Error Injection 4-11
Data Inhibit 4-13
Analyzer Functions 5-1
Automatic Setup Functions (SYNC) 5-2
Synchronization (LOCK) Threshold 5-6
Clock, Data, and Reference Data Inputs 5-7
Monitor Outputs 5-13
Error Detection Set-up 5-14
Viewing Results 5-21
Printing Results (Reports) 5-22
Result Definitions 5-28
Error History Indicators 5-31
Audio (Beeper) Function 5-32
Analyzer Error Messages 5-33
Starting & Stopping Measurements 5-34

Menus 6-1
Menu Basics 6-2
Menu Summaries 6-6
Menu Function Definitions 6-9
Word Edit (EDIT) 6-10
Word Length (LENGTH) 6-11
Word Fill (FILL) 6-12
Word Order (ORDER) 6-13
Word Sync. Pulse (PSYNC) 6-14
Word Synchronization Threshold (SYNC) 6-15
Test Length (LENGTH) 6-16
Test Mode (MODE) 6-17
Test Reports (REPORT) 6-18
Test Threshold (THRES) 6-19
Test Squelch (SQUEL) 6-20
Test Print (PRINT) 6-21
Test View Previous (VIEW-PRE) 6-22
Test View Current (VIEW-CUR) 6-23
Window Mode (MODE) 6-24
Window Interval in Bits (BITS) 6-25
Window Interval in Hrs:Min:Sec (SECOND) 6-26
Window Reports (REPORT) 6-27
RS-232 Baud Rate (BAUD) 6-28
RS-232 Parity (PARITY) 6-29
RS-232 Data Bits (SIZE) 6-30
RS-232 End-of-Line Char.(EOL) 6-31
RS-232 Xon/Xoff (XON/XOFF) 6-32
RS-232 Echo (ECHO) 6-33
GPIB 6-34
External Clock Term. (CLOCK) 6-35
Utility Option (OPTION) 6-36
Utility Version (VER) 6-37
Date (DATE) 6-38
Time (TIME) 6-39

Using Printers and External Controllers 7-1
Remote Control Basics..... 7-2
Printer Basics..... 7-3
Using the RS-232C Port..... 7-4
Using the GPIB Port..... 7-8
GPIB Status and Event Reporting System..... 7-13
Remote Commands 8-1
Command Summary - Alphabetical 8-7
Command Descriptions 8-12

Appendices

Specifications A-1
Default Settings B-1
Options C-1
Customer Acceptance Test D-1
Cleaning Instructions E-1
Glossary..... F-1
Index I-1

List of Figures

2-1 Example of BERT Application..... 2-2
2-2 Nominal Generator NRZ Data and Clock Output Waveforms 2-3
2-3 Generator Front & Rear Panels 2-5
2-4 Analyzer Front & Rear Panels 2-6
2-5 Generator Display..... 2-7
2-6 Analyzer Display 2-8

4-1 Nominal Generator Clock, Data Waveforms showing Amplitude, Baseline Offset and Vtop..... 4-6
4-2 Generator Clock and Data Output Equivalent Circuits 4-6

5-1 Analyzer Clock and Data Input Equivalent Circuits..... 5-7
5-2 TOTALIZE Measurement Process..... 5-15
5-3 WINDOW Measurements Process 5-16
5-4 TEST Measurement Process..... 5-17
5-5 Example Analyzer Setup Report 5-23
5-6 Example End-of-Test Report 5-24
5-7 Example End-of-Window Reports..... 5-25
5-8 Example On-Error Reports 5-26

7-1 Standard Event Status Register (SESR) 7-15
7-2 Test Status Register (TSR) 7-16
7-3 Status Byte Register (SBR) 7-17

List of Tables

2-1 Generator Inputs & Outputs 2-14
2-2 Analyzer Inputs & Outputs 2-15
2-3 Using F2, F3 to Select Input Set-up 2-20

3-1 AC Power Fuse Types 3-2
3-2 PRBS (2N-1) Test Patterns 3-7
3-3 Mark Density Patterns 3-8

4-1 External Clock Input Specifications vs. Termination 4-3
4-2 Output Setup Rules vs. Termination Impedance 4-7
4-3 Data Inhibit Logic 4-13

5-1 Actions taken by Analyzer when Synchronization is Lost 5-3
5-2 Synchronization Threshold 5-6
5-3 How F2, F3 determine Input Set-up 5-8
5-4 Input Terminations for CLOCK, DATA, and REF DATA 5-9
5-5 Input Threshold Range as a Function of Termination 5-11
5-6 How to Tell which Display Mode is Active 5-18

6-1 Menu Descriptions 6-6
6-2 Analyzer Menu System Overview 6-7
6-3 Generator Menu System Overview 6-8

7-1 RS-232C (Serial Port) Parameters 7-4
7-2 RS-232C Connector Pin-out 7-5
7-3 RS-232C Port Error Messages 7-7
7-4 GPIB Interface Functions 7-4
7-5 Commands that generate Multi-Unit Responses 7-5
7-6 Status Registers, Enable Registers, and Related GPIB Commands 7-7
7-7 SESR Bit Definitions 7-4
7-8 Test Status Register Bit Definitions 7-5
7-9 Status Byte Register Bit Definitions 7-5

8-1 Symbols 7-4
8-2 Numeric Response Types..... 7-5
8-3 Command Examples 7-7

A-1 Synchronization Thresholds with 128K Option Installed..... A-6

Safety

Safety Terms Used in This User's Guide

CAUTION!	Indicates an operation or practice that could harm the instrument.
WARNING!	Indicates an operation or practice that could result in personal injury or loss of life.

Safety Labels Found on the Instrument

DANGER High Voltage	Protective Ground (Earth) Terminal	ATTENTION Refer to Manual

AC Power

The instrument is designed to operate from a power source that provides no more than 250 volts RMS between the two supply conductors or between either supply conductor and ground.

Ground the Instrument

The *gigaBERT700* is grounded through its AC power cord. Plug this power cord only into a properly grounded, three-conductor outlet. If you operate the instrument without a proper ground then all metal surfaces on the instrument become potential shock hazards.

To avoid potential hazards, use this product only as specified.

Use the Proper Fuse

Operating the instrument with an improper fuse creates a fire hazard. The correct fuses to install in the *gigaBERT700* are shown below:

Power Voltage	Fuse Type
115 VAC	2 A, Slo-Blo
230 VAC	1 A, Time Delay

Do Not Operate in Explosive Atmospheres

This instrument does not provide protection from static discharges or arcing components and therefore must not be operated in an explosive atmosphere .

Do Not Remove Instrument Covers

To avoid a shock hazard and to maintain proper air flow, never operate the *gigaBERT700* with any of its outside covers removed.

Static Sensitive Device Notice

gigaBERT700 outputs use a GaAs FET design and therefore are susceptible to damage from externally applied over-voltage or electrostatic discharge. Never apply reverse voltage to DATA or CLOCK outputs or voltages that are outside the range specified in Appendix A of this manual. Operate the instrument only in a static-controlled environment.

SMA Connectors

Be careful when attaching test cables to SMA connectors. Always tighten the nut on the SMA connector rather than the cable itself. Never tighten an SMA connector nut using more than 10 lb.-in. of torque.

Behavior of Outputs - Turning Power On or Off

When the *gigaBERT700* Generator is powered or de-powered its DATA and CLOCK outputs may saturate to their specified positive or negative rail, that is +2 V or - 2 V, for up to 400 milliseconds. If this condition could be harmful to your equipment then remove all connections to your *gigaBERT700* Generator CLOCK and DATA outputs before powering or de-powering the instrument.

Getting Started

This chapter defines the scope of the *gigaBERT700* User Guide. It also an instrument check-out.

Scope of This User Guide

The manual explains how to set up and operate your Tektronix *gigaBERT700* Generator and Analyzer.

Specifically, it includes the following:

- Initial check-out procedure for your *gigaBERT700* (Chapter 1).
- Front/rear panel feature overview (Chapter 2).
- Local operation (Chapters 3, 4, and 5).
- How to use the menu system (Chapter 6)
- Remote operation and printing (Chapter 7).
- Remote commands (Chapter 8)
- Specifications (Appendix A)
- Factory default settings (Appendix B)
- Options (Appendix C)
- Customer Acceptance Test (Appendix D)

Initial Self-Check Procedure

You may perform the following procedure as an initial self-check of your new *gigaBERT700* Generator and Analyzer. It is also a useful introduction to the basic features and operation of the *gigaBERT700*.

The fan openings of the *gigaBERT700* need 2-inches of clearance for proper ventilation.

Procedure:

1. Make sure both the Generator and Analyzer are equipped with the proper fuse (See Section 3.1).
2. Make sure that the Generator and Analyzer rear-panel power switches are ON, and that their front-panel power switches are in the STBY position.
3. Plug both instruments into grounded (three-conductor) AC power outlets.
4. Connect a 50 ohm SMA cable from the Generator CLOCK output to the Analyzer CLOCK input.
5. Connect a 50 ohm SMA cable from the Generator DATA output to the Analyzer DATA input.
6. Power the Generator while pressing and holding its VIEW ANGLE, MSB 1 and (PATTERN) CLEAR keys simultaneously. Release the key after the message **Default Settings** appears in the display. Repeat this procedure with the Analyzer. This will force both the Generator and Analyzer to power up using factory default settings.
7. Set up the Generator clock and data outputs using controls in the OUTPUT box as follows:

Set this parameter…	to this value	… using this procedure.
DATA amplitude.	2 volts	Press the DATA key. Press AMPLITUDE up/down keys until data amplitude is set to 2.00V.
DATA baseline offset	-1 volt	Press BASELINE OFFSET up/down keys until data baseline offset is set to -1.00V.
CLOCK amplitude	2 volts	Press CLOCK. Press AMPLITUDE up/down keys until clock amplitude is set to 2.00V.
CLOCK baseline offset	-1 volt	Press BASELINE OFFSET up/down keys until clock baseline OFFSET is set to -1.00V.

8. Set Generator pattern to a 2^{23}-1 bit PRBS using controls in the PATTERN box as follows:
   a. Press PRBS.
   b. Press the pattern up/down keys until PATTERN is set to PN 23.
9. Verify that the Generator error rate generator is off. If the LED in the error inject RATE key is on, then press RATE one more times until it turns off.
10. Verify that the Analyzer auto-search function is enabled. If the LED in the AUTO SEARCH key is off, then press AUTO SEARCH one time to turn it on. At this point, verify that the green LOCK LED in the Analyzer SYNC box is on.
11. Zero all Analyzer error counts by pressing CLEAR in the ERROR DETECTION group.
12. Reset all Analyzer history LEDs by pressing CLEAR in the ERROR HISTORY group.
13. Verify gigaBERT700 Analyzer can detect errors by pressing the Generator error inject SINGLE key several times. Verify that the Number of Errors count displayed by the Analyzer increments each time the Generator SINGLE key is pressed.

In effect you are now performing a bit error rate test on the test cables connecting the *gigaBERT700* Generator and Analyzer. In an actual BER test, *gigaBERT700* Generator clock and data outputs would be connected to inputs on a "device under test" (DUT) while *gigaBERT700* Analyzer inputs would be connected to outputs on the DUT.

BERT Basics and Features

BERT Basics

The *gigaBERT700* Generator and Analyzer together comprise a 700 Mb/s, serial, bit error rate test system or BERT. A BERT is an instrument designed to measure the bit error rate (BER)—or more generally, the error performance—of a digital communications device, module, or system. A typical BERT application, for example, would be to measure the error performance of the electrical-to-optical (E/O) and optical-to-electrical (O/E) output modules of a high-speed fiber optic transmission system (FOTS), as shown in Figure 2-1.

Figure 2-1 Example BERT Application

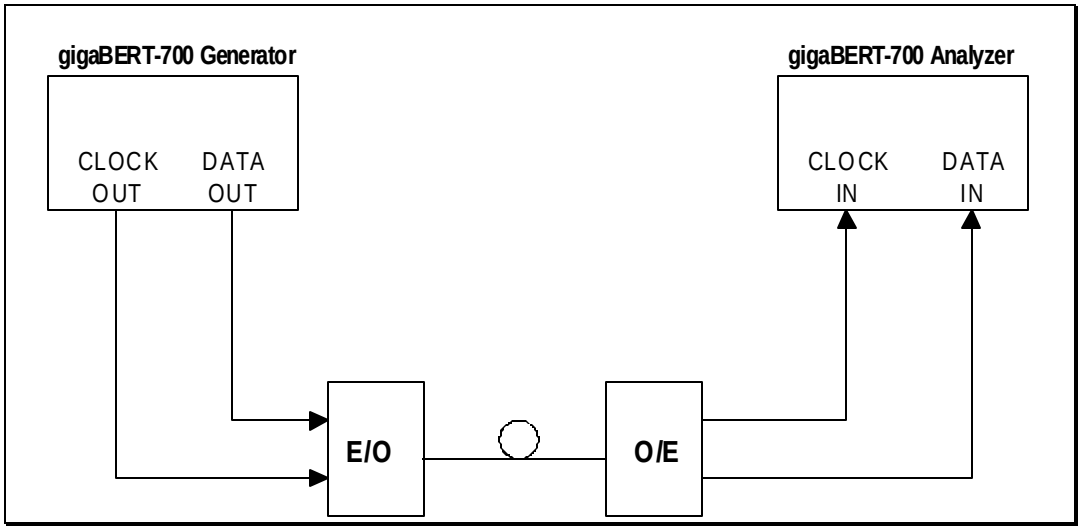

The *gigaBERT700* is described as a *serial* BERT because it is designed to test one digital path at a time. The term serial also distinguishes the *gigaBERT700* from parallel BERTs, such as the Tektronix *multi*BERT-100, which is designed to test multiple digital signal paths simultaneously.

The *gigaBERT700* Generator, also known as the transmitter or "Tx", can generate various test patterns, including pseudo-random bit sequences (PRBS) and user-defined *word* patterns. The Generator output consists of a two level, non-return to zero (NRZ) data signal and its associated clock signal, as illustrated in Figure 2-2. In the NRZ format, the data signal remains at either a logic "1" or logic "0" level for the entire duration of each bit time slot, except for a small transition period between time slots containing different data. The corresponding clock signal is a nominal "square wave" whose frequency defines the bit rate of the test signal.

Figure 2-2 Nominal Generator NRZ Data and Clock Output Waveforms

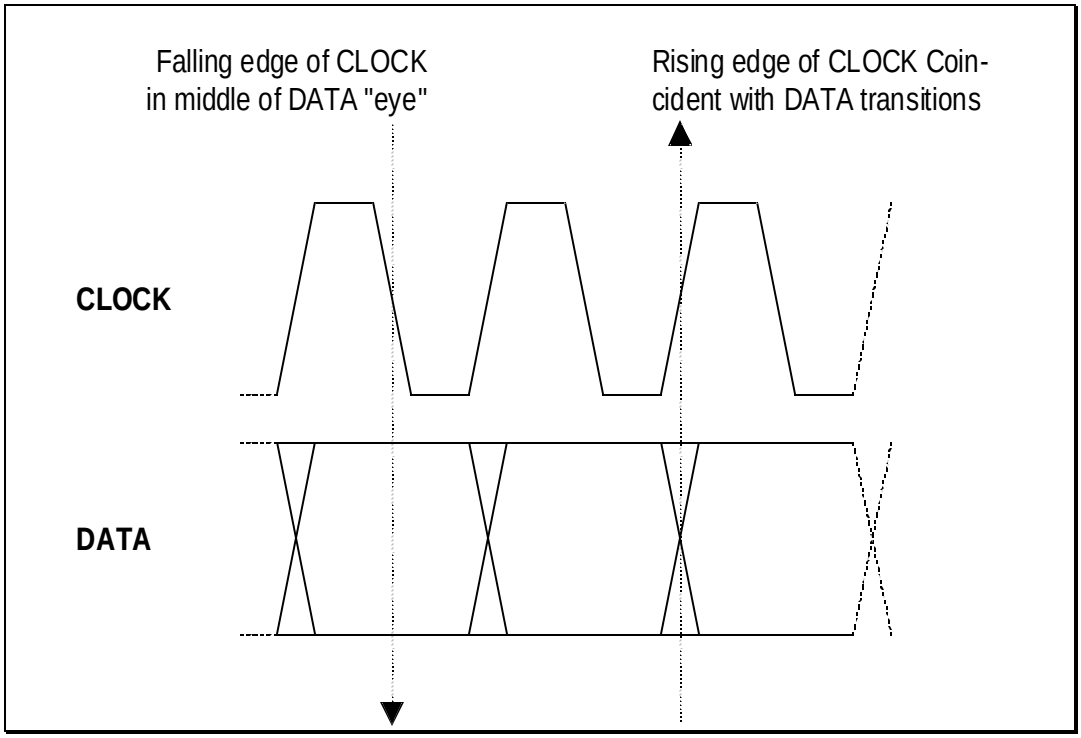

The nominal Generator clock/data phase relationship is fixed so that the falling edges of the clock signal occur in the middle of bit time slots of the data signal. The amplitude and baseline offset of the Generator's clock and data outputs are adjustable to insure compatibility with a wide range of input circuit designs and logic families including ECL, positive ECL, and GaAs.

The *gigaBERT700* Analyzer, also known as the receiver or "Rx", can terminate and analyze the NRZ output of a digital device, module, or system being tested by the *gigaBERT700* Generator or an equivalent signal source. The decision voltage or threshold of the Analyzer DATA and CLOCK inputs can be adjusted to accommodate different logic families. The Analyzer can also add a variable amount of delay to the input data signal to accommodate different clock/data phase relationships at the output of the device under test.

The primary measurements made by the *gigaBERT700* Analyzer are bit errors and bit error rate.

Front and Rear Panels

The front and rear panels of the *gigaBERT700* Generator and Analyzer are illustrated in Figures 2-3 and 2-4 respectively. See the remaining sections in this chapter for a brief explanation of each input, output, control, and indicator shown in these figures. See Chapters 3, 4, and 5 for additional information and setup procedures using these controls and indicators.

Figure 2-3 Generator Front and Rear Panels

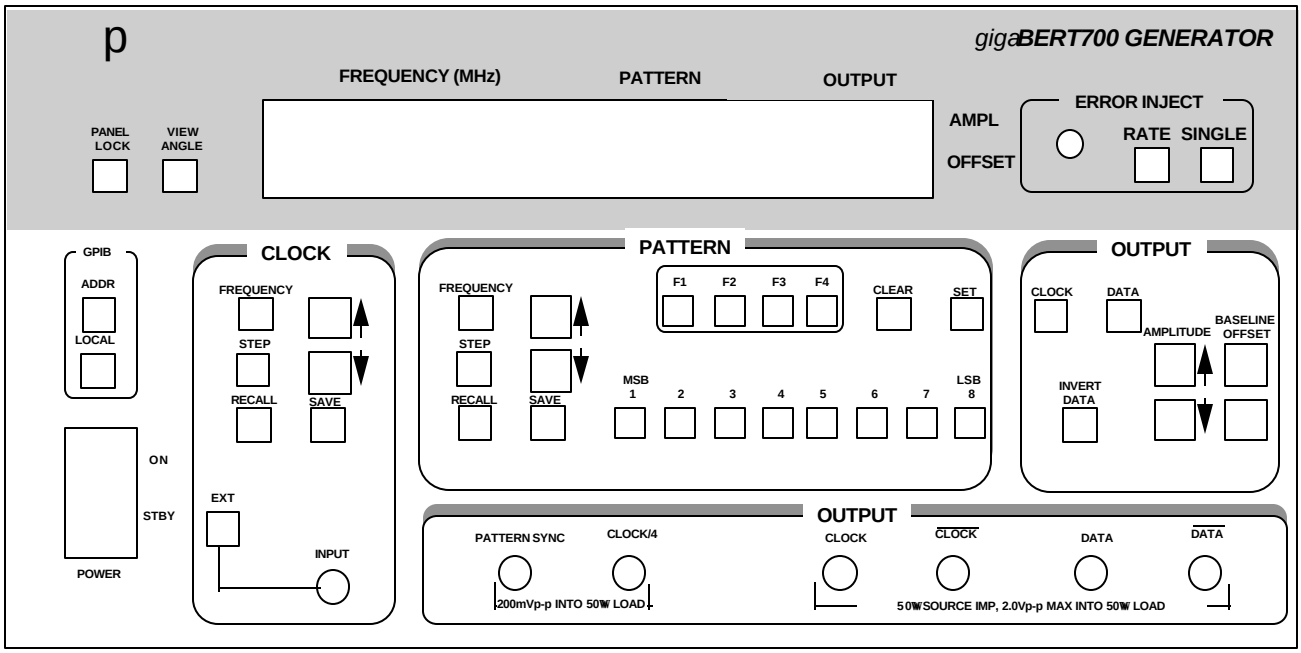

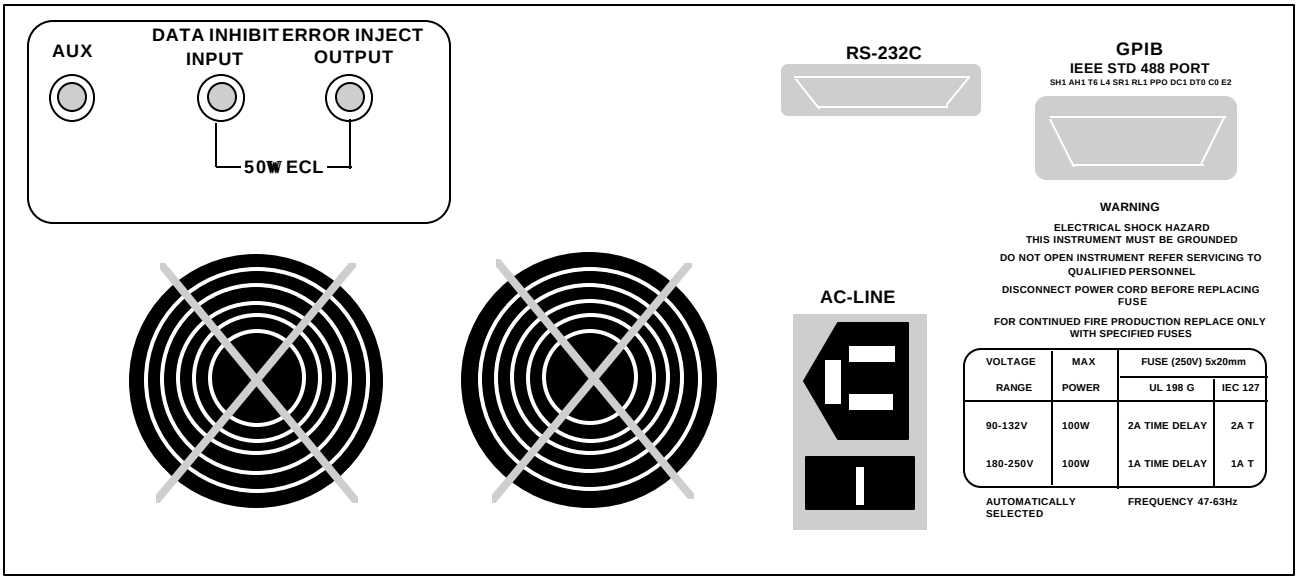

Figure 2-4 Analyzer Front and Rear Panels

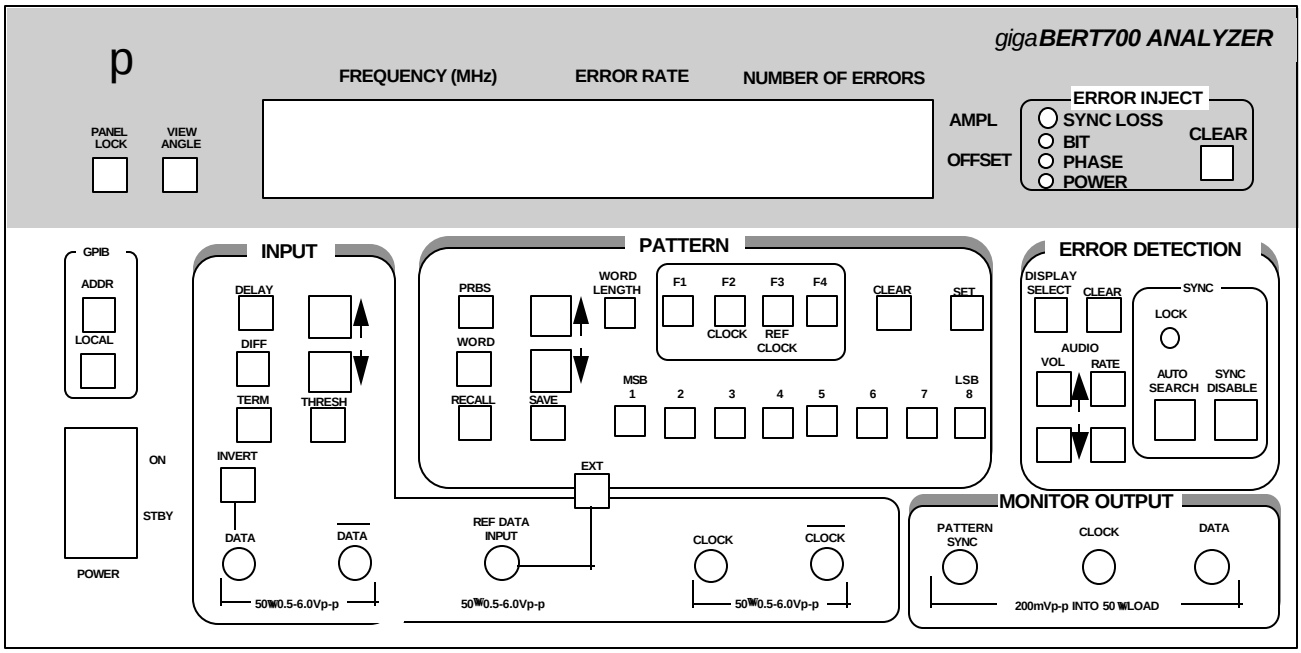

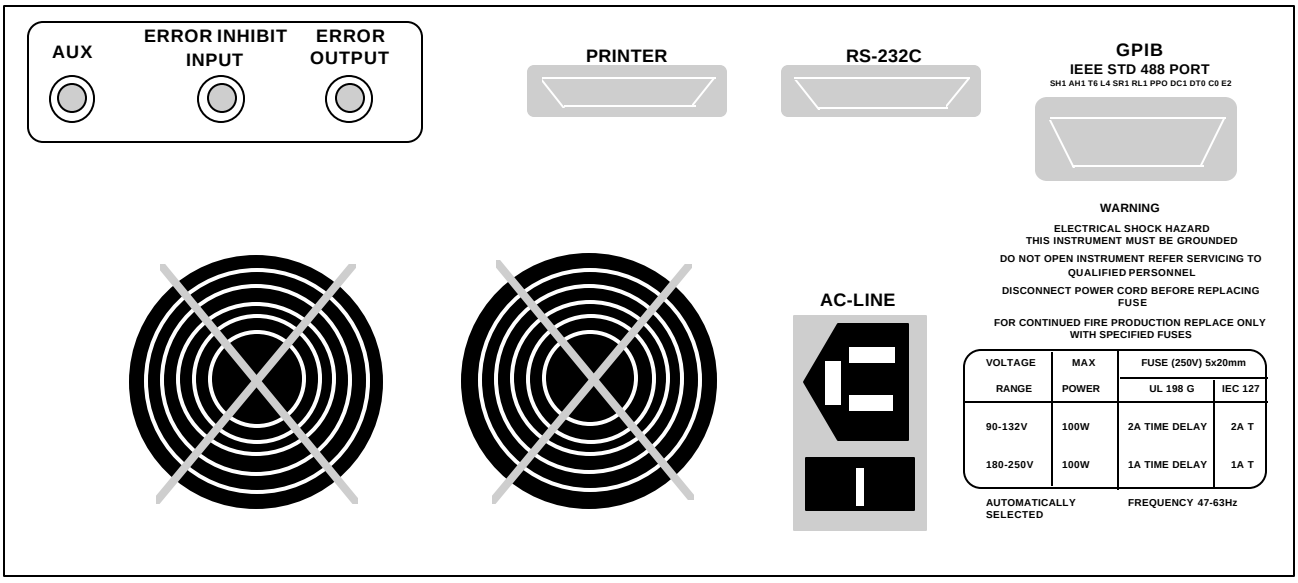

Display Formats

The normal display format for the Generator and Analyzer are explained below. Note that the "normal" format is simply the format of the display when not in the menu mode. The display format used in the menu mode is explained in Chapter 6.

Generator Display

The Generator has a two-line by 24-character high-contrast liquid crystal display (LCD). The Generator display in its normal (non-menu) mode is illustrated in Figure 2-5.

Figure 2-5. Generator Display in Its Normal (Non-menu) Mode

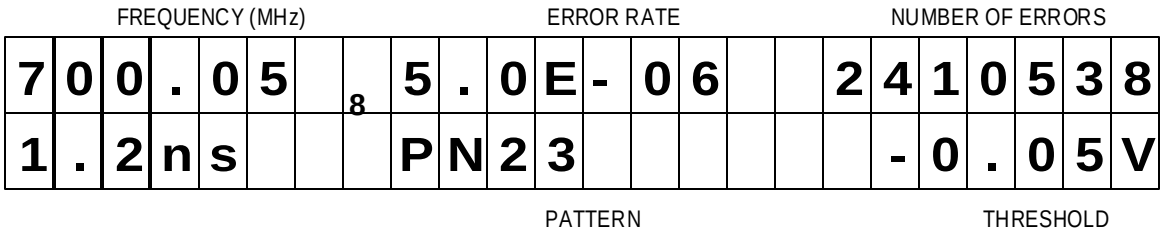

The function of each field in the normal Generator display format—that is the format used when the Generator is not in the menu mode—is described below:

- The *top left* section of the Generator display is used to show the current frequency of the internal clock in MHz. For example a display of 622.050 indicates a frequency of 622.050 MHz.
- The *top middle* section normally shows the current test pattern. For example PN23 INV indicates that the current pattern is an inverted 2^{23}-1 PRBS.
- The *top right* section of the display shows the amplitude of the CLOCK or DATA output, depending on which output control (CLOCK or DATA) is selected.
- The *bottom left* section of the Generator display may show either the presently selected word memory (WORD 0 ... WORD 7) or the selected frequency memory (FREQ 0 ... FREQ 9).
- The *bottom middle* section of the display shows the present error inject mode. If an internal error inject mode has been selected, then the generated error rate will be indicated.

- The *bottom right* section of the Generator display will normally show the baseline offset of the CLOCK or DATA output, depending on which output control (CLOCK or DATA) is selected.

Analyzer Display

Like the Generator, the Analyzer has a two-line by 24-character high-contrast liquid crystal display (LCD).The Analyzer display in its normal (non-menu) mode is illustrated in Figure 2-6.

Figure 2-6 Analyzer Display in Its Normal (Non-menu) Mode

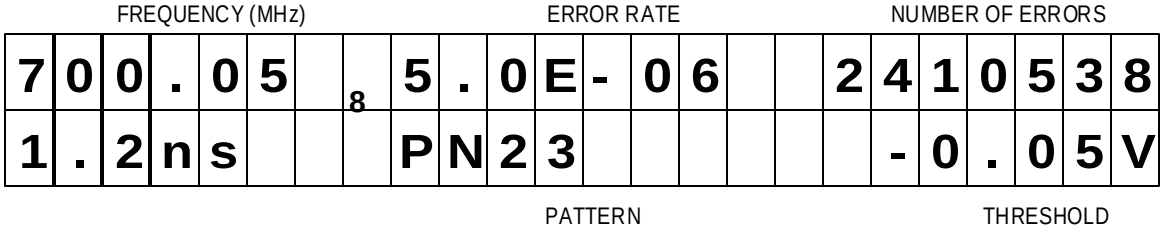

Like the Generator, the Analyzer has a two-line by 24-character high-contrast liquid crystal display (LCD). The function of each field in the normal Analyzer display format—that is the format used when the Analyzer is not in the menu mode—is described below:

- The *top left* section of the Analyzer display is used to show the measured frequency of the input clock signal in MHz. For example a display of 622.05 indicates a measured frequency of 622.05 MHz. Note that the Analyzer frequency display contains five significant digits while the Generator frequency display contains six. This is because the frequency shown in the Analyzer display is a *measurement result* while the frequency shown in the Generator display is an *instrument setup* which is known with more precision.
- The *top middle* and *top right* sections of the display normally show measured bit error rate and bit errors respectively. BER is expressed in exponential or "E" notation. For example, a display of 1.5E-09 indicates a measured BER of 1.5×10^{-9}. The Analyzer calculates BER and counts bit errors in three modes simultaneously: Window, Test, and Totalize. The symbol in front of the BER field indicates which mode has been selected for display. Window results are preceded by a blank space, that is no symbol. Totalize results will be preceded by an ∞ (infinity) symbol. Test results will be preceded by a **T**, **U**, or **R** depending on the selected test mode: timed, untimed, or repeat. Refer to Chapter 4 for more

information on displaying Analyzer results and starting and stopping tests.

- The *bottom left* section of the Analyzer display can show the following setup parameters: delay in nanoseconds for the DATA or REF DATA input; the selected input termination (GND, -2V, +3V, or FLT) for the CLOCK, DATA, or REFERENCE DATA input, or the selected word memory (WORD 0 ... WORD 7), Note that DATA input delay may be set manually by the user, or automatically by the AUTO SEARCH feature.
- The *bottom middle* section of the display shows the currently selected Analyzer pattern, for example PN23 indicates a 2^{23}-1 PRBS. This section will also indicate when input pattern inversion is enabled by displaying INV after the pattern name.
- The *bottom right* section of the Analyzer display shows the current value of the input threshold in volts for the CLOCK, DATA, or REF DATA inputs. Note that the CLOCK and DATA input thresholds may be set manually by the user, or automatically by the AUTO SEARCH feature.

Outputs and Inputs

This section introduces all inputs and outputs of the *gigaBERT700* Generator and Analyzer. Unless otherwise indicated, all signal inputs and outputs are equipped with SMA female connectors and have a nominal input or output impedance of 50 ohms. However, a 75 ohm Option is available for both the Generator and Analyzer which changes nominal impedance of key inputs and outputs to 75 ohms (See Appendix C).

Generator OUTPUT Section

The OUTPUT section of the Generator front panel contains the outputs listed below. For more detailed descriptions of these Generator outputs, and related setup information, see Chapter 4.

- **CLOCK and DATA [outputs]:** These two connectors comprise the main test signal output of the Generator. DATA is the NRZ output of the pattern generator and CLOCK is its corresponding clock signal. The amplitude and baseline offset of CLOCK and DATA are variable. CLOCK and DATA may be used to drive single-ended clock and data inputs, respectively.
- **CLOCK-BAR and DATA-BAR [outputs]:** These are complimentary outputs to CLOCK and DATA. That is, CLOCK and CLOCK-BAR together can drive a differential clock input, while DATA and DATA-BAR together can drive a differential data input. These complementary outputs should be terminated with a 50 ohm load (or a 75 ohm load if the 75 ohm Option is installed) when not in use—that is, when the Generator is driving singled-ended inputs.
- **CLOCK/4 [output]:** This is a clock signal at one quarter the frequency of CLOCK. This output may be useful when observing generator outputs using an oscilloscope that does not have the bandwidth to trigger on the CLOCK output.
- **PATTERN SYNC [output]:** This is a train of pulses that occur once per pattern frame, that is once per pattern repetition. This output may be useful as a trigger signal when observing the Generator data output using an oscilloscope. The location of PATTERN SYNC is fixed when generating PRBS or short word patterns, or programmable when generating long word patterns (requires 128K Option). See Chapter 6 for information on how to set PSYNC pulse location using the menu system or Chapter 8 to set PSYNC pulse location using remote commands.

Generator CLOCK Section

The CLOCK section of the Generator front panel contains the external clock input described below. For more information on using an external clock source and configuring the external clock input, see Chapter 4.

- **INPUT [input]:** This is external clock input. When the external clock mode is enabled (EXT on), the signal applied to this input will be used in place of the Generator's internal clock. Otherwise, when the internal clock mode is enabled (EXT off), any signal applied to this input will be ignored.

Generator Rear Panel

The rear-panel of the Generator contains the auxiliary signal, remote control, and AC-power inputs shown below. See Chapter 7 for instruction on how to set up the RS-232 and GPIB ports, and general information on using external controllers with the Generator.

- **AUX:** This connector is not used.
- **DATA INHIBIT INPUT:** A signal applied to this input may be used to asynchronously gate the data outputs of the Generator.
- **ERROR INJECT INPUT:** A signal applied to this input may be used to control error injection when the Generator is in the external (EXT ERR) injection mode. One error will occur for each rising edge of this signal.
- **RS-232C [input/output]:** A two-way serial port that may be connected to an external controller or serial printer.
- **GPIB [input/output]:** An IEEE-488 standard I/O port that may be connected to a GPIB compatible controller. This port is not compatible with stand-alone GPIB printers.
- **AC LINE [power input]:** This is the AC power input connector for the Generator.

Analyzer INPUT Section

The INPUT section of the Analyzer front panel contains the test signal NRZ data and clock inputs shown below. For more detailed descriptions and related setup information, see Chapter 4.

- **CLOCK and DATA [inputs]:** These two inputs comprise the main test signal input to the Analyzer. DATA is the main NRZ data input to the Analyzer pattern detector and CLOCK is its corresponding clock signal. Both inputs have adjustable input decision thresholds and selectable terminations. In addition, a variable amount of delay may be added to the DATA input to properly phase-align the clock and data signals. CLOCK and DATA

may be used to terminate singled-ended clock and data outputs, respectively.

- **CLOCK-BAR and DATA-BAR [inputs]:** These are complimentary inputs to CLOCK and DATA. That is, CLOCK and CLOCK-BAR together comprise a differential clock input, while DATA and DATA-BAR together comprise a differential data input. When the Analyzer is connected to singled-ended clock and data signals, these inputs are not used.
- **REF DATA [input]:** This is an input for a reference data signal. When the external reference mode is selected (LED in EXT key is on), the signal appearing at the REF DATA input will be used as the reference signal to perform bit error analysis instead of a (reference) pattern generated by the Analyzer's error detection circuit. Note that REF DATA uses the same clock signal as DATA, however different amounts of delay can be added to the DATA and REF DATA inputs to account for phase differences between the two signals.

Analyzer MONITOR Section

The MONITOR section of the Analyzer front panel contains the auxiliary outputs shown below. These outputs may be used to monitor the test signal as seen by the Analyzer. For more information and related setup instructions, see Chapter 4.

- **CLOCK [output]:** A buffered copy of the clock signal received by the Analyzer.
- **DATA [output]:** A regenerated (re-clocked) version of the data signal received by the Analyzer.
- **PATTERN SYNC [output]:** A train of pulses that occur once per pattern frame, during a byte selected by the user with the PSYNC menu. This output may be used to trigger an oscilloscope to view a particular section of the data pattern.

Analyzer Rear Panel

The rear-panel of the Analyzer contains the auxiliary signal, remote control, printer, and AC-power inputs shown below. See Chapter 7 for instruction on how to set up the RS-232 and GPIB ports, and general information on using printers and external controllers with the Analyzer.

- **ERROR INHIBIT INPUT:** A signal applied to this input may be used to asynchronously gate on/off the error detection function of the Analyzer. That is, while the signal at this input is low, errors are counted. While it is high, error counting is inhibited.

- **RZ ERROR OUTPUT:** One pulse will be generated at this output for each bit error detected. May be connected to an external recording device, for example, to log the exact times that errors occur.
- **PRINTER [output]:** A one-way port that may be connected to a "parallel printer"—that is, any printer compatible with the parallel port (LPT1 etc.) of an IBM-compatible PC.
- **RS-232-C [input/output]:** A two-way serial port that may be connected to an external controller (e.g. a PC or workstation) or to a serial printer.
- **GPIB [input/output]:** A two-way, IEEE-488 compatible I/O port that may be connected to an external controller via a GPIB cable.

Connectors, Terminations, and Levels

Tables 2-1 and 2-2 below summarize the physical interface characteristics of all *gigaBERT700* Generator and Analyzer inputs and outputs.

Table 2-1 Generator Inputs and Outputs

Connector Label	Signal Type	Location	Connector Type	Impedance, amplitude, and offset
DATA	output	OUTPUT section	SMA, female	50 ohm, variable amplitude and offset
CLOCK	output	OUTPUT section	SMA, female	50 ohm, variable amplitude and offset
DATA-BAR	output	OUTPUT section	SMA, female	50 ohm, variable amplitude and offset
CLOCK-BAR	output	OUTPUT section	SMA, female	50 ohm, variable amplitude and offset
CLOCK/4	output	OUTPUT section	SMA, female	50 ohm, 200mV into 50Ω
PATTERN SYNC	output	OUTPUT section	SMA, female	50 ohm, 200mV into 50Ω
CLOCK INPUT	input	CLOCK section	SMA, female	50 ohm, see NOTE 1
DATA INHIBIT	input	rear panel	BNC, female	50 ohm, ECL
ERROR INJECT	input	rear panel	BNC, female	50 ohm, ECL
RS-232	I/O	rear panel	25 pin, D type	RS-232C standard levels and impedance
GPIB	I/O	rear panel	GPIB	IEEE-488 standard levels and impedance

NOTE1

When GND termination is selected, 0.5V-2.0V p-p around a threshold of 0.0V.

When -2V termination is selected, 0.5V-1.4V around a threshold of -1.3V.

Table 2-2 Analyzer Inputs and Outputs

Connector Label	Signal Type	Section	Connector Type	Impedance, threshold, and delay
DATA/DATA BAR	input	INPUT	SMA, female	50 ohm, variable threshold and delay. Selectable termination: GND, -2 V, +3V. AC
CLOCK/CLOCK BAR	input	INPUT	SMA, female	50 ohm, variable threshold. Selectable termination: GND, -2 V, +3V. AC
REF DATA	input	INPUT	SMA, female	50 ohm, ECL, variable delay, selectable termination GND, -2V, +3V, AC
PATTERN SYNC	output	MONITOR	SMA, female	50 ohm, 200mV into 50Ω
CLOCK	output	MONITOR	SMA, female	50 ohm, 200mV into 50Ω
DATA	output	MONITOR	SMA, female	50 ohm, 200mV into 50Ω
ERROR INHIBIT INPUT	input	rear panel	BNC, female	50 ohm, ECL
RZ ERROR OUTPUT	output	rear panel	BNC, female	50 ohm, 200mV into 50Ω
PRINTER	output	rear panel	25-pin, D male	Compatible with PC parallel printers
RS-232C	I/O	rear panel	25-pin, D male	RS-232 levels and impedance
GPIB	I/O	rear panel	GPIB	IEEE-488 standard levels and impedance

Controls and Indicators

All of the controls, indicators, inputs, and outputs found on the Generator or Analyzer front or rear panels are introduced in this section. For more detailed descriptions, and setup procedures using these controls and indicators, see Chapters 3, 4, and 5.

Power Switches

The Generator and Analyzer are both equipped with two power switches:

- **ON/STBY (front-panel)**
- **ON/OFF (rear-panel)**

You should normally leave the rear-panel ON/OFF power switch on, and use the front panel switch to power or de-power the instrument.

View Angle and Panel Lock Keys

The PANEL LOCK and VIEW ANGLE keys are located near the top, left corner of the front panel.

- **VIEW ANGLE:** Use this key to select the optimum LCD viewing angle.
- **PANEL LOCK:** Use this key to "lock" and "unlock" the front panel. While the front panel is locked, all keys that can cause setup changes are disabled. This feature can help prevent accidental loss of data when performing long-term or critical tests.

☑ **NOTE**: To return the Generator or Analyzer to factory default settings, depower the instrument and then re-power it while pressing and holding the VIEW ANGLE, MSB 1, and (PATTERN) CLEAR keys at the same time. Release these keys after the message **Default Setup** appears in the display.

GPIB Section Controls

There are two keys in the GPIB section:

- **ADDR**: Key used to set GPIB address in the range 0 to 30.
- **LOCAL:** The LED in this key indicates whether the instrument is in the local mode (LED off) or remote mode (LED on). If the LED is on, you can return the instrument to local mode by pressing the LOCAL key.

Note that these two keys are used only when operating the instrument via its GPIB port. For more information on the GPIB port and remote control in general, see Chapter 7. For detailed descriptions of all remote commands, see Chapter 8.

Pattern Controls and Function Keys

The PATTERN section of both the Analyzer and Generator front panels contains two basic types or groups of controls: "pattern" and "function". The four function or "soft" keys—F1, F2, F3, and F4—have different functions depending on the current mode of the instrument. A primary function of these controls is to access and navigate the menu system. Pattern controls, which includes all other controls in the PATTERN section, are used to select edit, save, and recall test patterns.

Pattern Controls

- **PRBS**: Press this key, and then the pattern up/down keys to select a PRBS pattern.
- **WORD**: Press this key either to select a word or ROM pattern or to edit the current word pattern.
- **SAVE and RECALL**: Use these keys to save and recall **user-created word patterns** to and from non-volatile memory. The standard *gigaBERT700* can store up to eight 16-bit or short word patterns. When equipped with the 128K Option, the *gigaBERT700* Generator and Analyzer can store up to eight long word patterns, each containing up to 128 kbits. You may also use the RECALL key to recall patterns from ROM, including the **mark-density patterns** which are provided as part of the 128K Option.
- **WORD LENGTH**: Press this key and then the up/down keys, to adjust the length of the current word pattern.
- **(-,¯)**: These are the pattern up/down keys. Their effect depends on which of the above pattern keys has been selected.
- **MSB 1 to LSB 8:** Use these keys to edit the displayed byte in the current word pattern. Each key will toggle one bit in the displayed byte.
- **CLEAR**: Pressing this key forces all bits in the displayed byte to 0.
- **SET**: Pressing this key forces all bits in the displayed byte to 1.

Function (Soft) Keys (F1, F2, F3, and F4)

Menu Functions: The primary use of the function keys in the Generator and Analyzer is to access and navigate each instrument's menu system. F1 may be thought of as the main menu key. Pressing F1 will

display the instrument's first level menu. Once inside the menu system, you may use the F1, F2, F3, and F4 keys to select different menus, or to make choices within a selected menu. Note that pressing the F1 key enough times will always get you out of the system. See Chapter 5. for an explanation of each Generator and Analyzer menu.

Analyzer INPUT Selection Function: When the Analyzer is not in the menu mode, you may press their F2 or F3 keys to determine which input is impacted by the INPUT section DELAY, TERMINATION and THRESHOLD keys. There are three choices. Leave both keys off to set up the DATA input, turn F2 on to set up the CLOCK input, or turn F3 on to set up the REF DATA input. Note that you cannot turn both F2 and F3 on at the same time. See Chapter 4 for more information on Analyzer setup.

Print Setup Function (Analyzer only): You can print a report showing the current setup of the Analyzer by pressing the F4 key. This function, however, is not active in the menu mode.

Generator CLOCK Section

Controls in the CLOCK section of the Generator are used to select clock mode (internal or external) and to set up the instrument's internal clock. The CLOCK section also contains the input connector for an external clock source. These controls and input are introduced below:

- FREQUENCY: When this key is selected (LED on), the clock up/down keys may be used to adjust the frequency of the internal Generator clock up or down. Each press of the frequency up or down key will increment or decrement frequency by the current step size.
- STEP: Select this key to adjust the frequency adjustment step size from 1 kHz to 100 MHz.
- SAVE: Use this key to save the present frequency into one of 10 frequency memory locations.
- RECALL: Use this key to recall a previously saved frequency.
- EXT: Press this key to toggle between internal clock mode (LED off) and external clock mode (LED on).
- **INPUT**: This is an *input* for an external clock source. A signal must be provided to this input when clock mode is set to external. However, when clock mode is internal, any signal appearing at this input will be ignored.

See Chapter 4 for detailed Generator clock setup procedures.

Generator OUTPUT Section

The controls shown below are used to set up the Generator's clock and data outputs. See Chapter 4 for Generator clock and data output setup procedures.

- **CLOCK**: Use this key to select clock amplitude and offset set up mode.
- **DATA**: Use this key to select data amplitude and offset set up mode.
- **AMPLITUDE (-, ¯)**: Use these up/down keys to adjust clock or data output amplitude.
- **BASELINE OFFSET (-, ¯)**: Use these up/down keys to adjust clock or data baseline offset.
- **INVERT DATA**: Use this key to toggle between output data inverted (LED on) and non-inverted (LED off) mode.

Generator ERROR INJECT Section

Controls in the ERROR INJECT section are used to set up the Generator's error injection function. See Chapter 4 for more information on how to set up the Generator's internal error injection function, and how to use an external signal source to control error injection.

- **RATE**: Press this control one or more times to select an internal error inject rate, or the external error inject mode.
- **SINGLE**: When the error inject function is set to single (ERR OFF), press this key to inject single errors. Or, when the error inject function is set to an internal rate, or to external, use this key to turn error injection off. Note that you could then press the RATE key to turn error injection back on at the same rate as before.
- **Error Inject (LED)**: The LED in the ERROR INJECT section will flash once for each injected error.

Analyzer INPUT Section

The controls shown below are used to set up the Analyzer clock and data inputs. See Chapter 4 for Analyzer input setup procedures.

- **DELAY*:** Press this key to add delay to the DATA or REF DATA inputs to adjust the clock/data phase relationship. Note that the Auto_Search function will automatically set data delay to a value which provides the maximum noise immunity, that is so that the active (falling) edge of the clock falls in the middle of data bit time slots.

- **THRESH*:** Press this key to set the input decision threshold for the DATA, CLOCK, and REF DATA inputs. Note that threshold does not apply when differential operation is selected.
- **TERM*:** Press this key to select the input terminations for the DATA, CLOCK, or REF DATA inputs. Available selections are: (GND, -2 V, +3 V, or AC),
- **DIFF*:** Press this key to toggle the data or clock input between single-ended (LED off) or differential operation (LED on).
- **INVERT:** Press this key to select either the data non-inverted (LED off) or data inverted (LED on) mode.
- **EXT:** This is an input for an external data reference signal.

* **NOTE**: Use the F2 and F3 function keys to determine which input will be affected by the DELAY, THRESH, TERM and DIFF controls as follows:

Table 2-3 Using F2 and F3 to Select Which Input to Set Up

F2	F3	Affected Input
off	off	DATA
on	off	CLOCK
off	on	REF DATA
on	on	not allowed

Analyzer ERROR DETECTION Section

The ERROR DETECTION section contains the following test setup and display controls:

- **DISPLAY SELECT:** Use this control to select which results are displayed in the BER the Bit Error fields. The options are Window, Totalize, or Test.
- **CLEAR:** Press this key to clear previous results and to start (or stop) timed tests.
- **AUDIO VOL (-, ¯):** Use these keys to increase or decrease the volume of the Analyzer's error beeper function.
- **AUDIO RATE (-, ¯):** Use these keys to increase or decrease the error rate threshold of the beeper function. Selections are 1E-x, where x = 2, 3, ... 16.

Analyzer SYNC Controls

The ERROR DETECTION section contains the following SYNC controls which are used to set up the Analyzer's automatic synchronization functions:

- **AUTO SEARCH:** Press this key to enable (LED on) or disable (LED off) the AUTO SEARCH feature. With AUTO SEARCH enabled, each time BER goes above the synchronization threshold (LOCK LED turns off) the Analyzer will automatically attempt to:
  1. set the decision level for the CLOCK and DATA inputs,
  2. set input DATA delay,
  3. determine which PRBS or short word pattern is being received, and
  4. determine if the pattern is inverted or not.
- **DISABLE:** Use this key to enable or disable automatic pattern re-synchronization. If DISABLE is off, then the Analyzer will automatically try to resynchronize its pattern detector (by looking for a new pattern alignment) when BER goes above the current synchronization threshold. If DISABLE is on, the Analyzer will not attempt to resynchronize regardless of the BER. This allows for very high BER measurements.
- **LOCK** (indicator): This indicator turns ON when BER is less than the current synchronization threshold, and OFF when BER is greater than or equal to this threshold.

See Chapter 5 for a more detailed explanation of the AUTO SEARCH and DISABLE controls.

Menu Overview

A wide range of "auxiliary" setup functions is provided in the *gigaBERT700* Generator and Analyzer menu systems. To enter the Generator or Analyzer menu system, simply press the instrument's F1 key. At this point the format of the display will change to show the first page of the top level menu. The top level menu in both the Generator and Analyzer contains other menus and various setup parameters. Once inside the menu system, you use the functions keys, F1 ... F4, to navigate to any menu function, and to make selections within each menu function.

See Chapter 5 for a detailed explanation each Generator and Analyzer menu function.

Functions Common to Generator and Analyzer

This chapter introduces *gigaBERT700* inputs, outputs, controls, and indicators. In addition it discusses setup and operation procedures that are common to the Analyzer and Generator.

AC Power

The *gigaBERT700* Generator and Analyzer are both AC powered. The power connector of both instruments is located on their rear panel next to the main instrument fuse and a power ON/OFF switch. Both instruments have a second power switch labeled ON/STBY on the front panel. Normally leave the rear panel switch on, and use the front panel switch to power and de-power the instrument.

Selecting 115 VAC or 230 VAC Operation

Both the *gigaBERT700* Generator and Analyzer are equipped with an auto-ranging AC power supply. This supply will operate over a voltage range of 90 to 250 VAC, and a frequency range of 47 to 63 Hz. Thus, no setup change is required to operate from 115 VAC at 60 Hz or 230 VAC at 50 Hz.

Fuse Replacement

WARNING! Never install the incorrect fuse. Operating the *gigaBERT700* Generator or Analyzer with an improper fuse creates a fire hazard. The correct fuses to install in the *gigaBERT700* Generator and Analyzer are shown in Table 3-1.

Table 3-1 AC Power Fuse Types

AC Power Voltage	Fuse Type
115 VAC	2 A, Slo-Blo
230 VAC	1 A, Time Delay

When replacing a fuse, you must use the following procedure:

1. Remove the power cord from its wall outlet.
2. Remove the power cord from the instrument.
3. Pop out the fuse cartridge using a screw driver or similar (dull, flat-bladed) tool.
4. Install the correct fuse, shown the table above, into the fuse holder.
5. Close the fuse cover.
6. Re-install the power cord to the instrument.
7. Plug the power cord into an AC power outlet
8. Make sure the rear-panel power switch is ON.

You may now power the instrument using the front-panel power switch.

Turning Instrument Power ON/OFF

The Generator and Analyzer are both equipped with *two* AC power switches—one on the front panel and one on the rear-panel. In both cases, normally leave the rear-panel switch in the ON position, and use the front panel ON/STBY switch to power and de-power the instrument.

LCD Viewing Angle

The optimum viewing angle of the *gigaBERT700* Generator or Analyzer LCD display may be adjusted using the VIEW ANGLE control. Each press of the VIEW ANGLE key will raise the optimum view angle until the highest angle is reached. The next press of VIEW ANGLE will return optimum viewing angle to its lowest angle, and so on.

Recalling the Default Setup

The default setup of the Generator and Analyzer are shown in Appendix B. To return the Generator or Analyzer to this setup, use the following procedure:

1. Turn instrument power off.
2. While holding down the VIEW ANGLE, MSB 1, and (PATTERN) CLEAR keys simultaneously, turn instrument power back on.
3. *After* you see the message **Default Settings** appear in the display, release the three keys. In a few seconds the normal display format will appear and the instrument will be in its default setup.

Locking the Front Panel

The instrument's front panel may be "locked" or "unlocked" using the PANEL LOCK control. When the front panel is locked, all keys that can cause a setup change are disabled. It is often useful to lock the front panel during a long or critical test to prevent accidental loss of test results. Note that the LED in the PANEL LOCK control indicates whether the front panel is locked (LED on) or unlocked (LED off).

Procedure:

- ❑ Simply press the PANEL LOCK control to toggle between the locked (LED on) and unlocked (LED off) state.

Selecting a Pattern

The following section defines the patterns that can be generated and analyzed by the *gigaBERT700* and how to set up the Generator and Analyzer to use a particular pattern. Note that the Generator and Analyzer are compatible with the same suite of test patterns and use the same setup procedures. Refer to Chapter 2 for a quick overview of each control in the PATTERN section.

Pattern Definitions

The *gigaBERT700* can generate and analyze three types of test patterns: Pseudo-random bit sequence (PRBS), mark density, and word. Each type has its own set of advantages and uses.

PRBS Patterns

Pseudo-random bit sequence (PRBS) patterns are designed to simulate "live traffic" and have been standardized by the telecommunications and computer industries. As a result they are often used to characterize or qualify new devices or systems. Two key characteristics of a PRBS are its overall length in bits and maximum number of contiguous 0s. The length of a PRBS pattern has the form 2^n-1. For example a 2^{23}-1 PRBS contains 8,388,607 bits. The maximum number of contiguous 0s in a PRBS pattern is n-1, for example 22 in a 2^{23}-1 PRBS. The PRBS patterns generated and analyzed by the *gigaBERT700* are listed in Table 3-2.

Table 3-2 PRBS (2^n-1) Test Patterns

N	Label Used in Generator and Analyzer Displays	Length (2^n-1 bits)	Maximum Number of Contiguous 0s
7	PN 7	127	6
15	PN 15	32767	14
17	PN 17	131,071	16
20	PN 20	1048575	19
23	PN 23	8388607	22

Mark Density Patterns (Option)

The average ones or mark density of a PRBS pattern is (almost exactly) 50%. That is, the number of 1s equals the number of 0s (plus one). However the *gigaBERT700* can also generate and analyze a set of "mark density" patterns with *average* mark densities from 1/8 (12.5%) to 7/8 (87.5%). Mark density patterns are not, however, simple 1/n patterns composed of isolated 1s separated by n-1 0s. Rather, they are randomized to better simulate live traffic with a particular average 1s density.

Note that the mark density pattern function are part of the 128K Generator or Analyzer option. The mark density patterns generated and analyzed by the *gigaBERT700* are listed in Table 3-3.

Table 3-3 Mark Density Patterns

Label of Pattern Used in Display	Average Mark Density
MRK 1/8	12.5%
MRK 1/4	25%
MRK 1/2	50%
MRK 3/4	75%
MRK 7/8	87.5%

Word Patterns

Word patterns are programmable by the user. Word patterns can be designed to cause specific stress characteristics, such as maximum jitter, or to simulate framed patterns like SONET, SDH, or FDDI. The standard *gigaBERT700* Generator and Analyzer will allow you to create and save up to eight 16-bit (two-byte) word patterns in battery-backed memory. Or, with the 128K Option installed, you can create and save up to eight *128 kbit* word patterns in battery backed memory. Note that the standard and 128K instruments also store the *current word* pattern in battery-backed memory.

PROM Patterns (Option)

The *gigaBERT700* can be equipped at the factory with optional programmable read-only memory (PROM) chips containing up to 10 additional patterns. PROM patterns may be defined by the customer but are not field programmable. Example PROM pattern applications are

framed signal generation and analysis or maximum jitter testing. Please contact Tektronix for specifications and availability of user-defined or factory-defined PROM patterns.

Selecting the Active Pattern

In this User's Guide, the pattern currently being generated by the Generator or analyzed by the Analyzer is called the *active* pattern. Procedures to make a selected PRBS, word, or mark density the current active pattern are provided below.

Selecting PRBS Patterns

To select a PRBS pattern:

1. Press the PRBS key. The instrument will now be in the PRBS pattern mode.
2. Press the pattern up/down keys until the name of the desired PRBS pattern is displayed. Available PRBS patterns are:
   - ❑ PN 7
   - ❑ PN 15
   - ❑ PN 17
   - ❑ PN 20
   - ❑ PN 23

The displayed PRBS pattern becomes the active pattern immediately.

Selecting the Current Word Pattern

- ❑ To make the current word pattern the active pattern, simply press the WORD key.

Selecting (RECALLing) a Saved Word, Mark Density or PROM Pattern

You can recall three types of patterns using the Generator or Analyzer RECALL function:

- ❑ word
- ❑ mark density, and
- ❑ PROM

8/16 bit word patterns are available on all instruments. Long-word (>16-bits) and mark density patterns are available only in units equipped with the 128K Option. PROM patterns are available only in instruments

equipped with the PROM Option. Note that the PROM Option can be installed only in instruments also equipped with the 128K Option.

Use the following procedure to select (recall) a word, mark density, or a PROM pattern:

1. Press the RECALL key.
2. Press the pattern up/down keys until the desired word or desired mark density pattern is displayed. Available selections are:
   - ❑ WORD 0
   - ❑ WORD 1

   ...
   - ❑ WORD 7
   - ❑ MRK 1/8
   - ❑ MRK 1/4
   - ❑ MRK 1/2
   - ❑ MRK 3/4
   - ❑ MRK 7/8
   - ❑ P0
   - ❑ P1

   ...
   - ❑ P9

The displayed word, mark-density, or PROM pattern becomes the active pattern immediately.

Word Patterns

This section explains how to create, edit, save, and recall word patterns using front panel controls or the menu system.

Basics

You may create and save up to eight word patterns in battery-backed memory locations WORD 0 through WORD 7. In addition, the current word pattern is stored in battery-backed memory. In standard units, each of the saved words and the current word can contain up to 16 bits. In Generators and Analyzers equipped with the 128K Option, which provides additional battery-backed memory, each of the saved words and the current word can contain up to 128 kbits.

There are three ways to create *gigaBERT700* word patterns:

1. **Using front panel controls**. This is usually the quickest way to create and edit short patterns. It also can be a practical way to edit a few bytes in long patterns if these bytes are located near to each other.
2. **Using the menu system**. Because it provides direct byte addressing, this is often the best method for editing a few widely scattered bytes in long word patterns. The menu system also provides the FILL function, used to load a user-specified 8-bit pattern into all bytes, and the ORDER function, used to set the bit-order in each byte to MSB or LSB first. Thus you can use the menu system to create long words with simple bit patterns using its byte fill, order, and editing capabilities.
3. **Downloading:** This is the best way to create long words with complex patterns. Long word patterns may be created on an external controller, using a text editor or specialized software, and downloaded via the instrument's GPIB or RS-232 ports. Downloading is the only practical way to create simulations of SONET, SDH, FDDI or other framed signals.

Creating Word Patterns Using Front Panel Controls

Standard Instruments

Use the following procedure to create word patterns using front panel controls in standard instruments, that is Analyzers and Generators **not** equipped with the 128K Option:

1. If you are using a previously saved pattern as the basis for the new pattern, recall this pattern from memory. (See Recalling Word Patterns).
2. Press the WORD key. The LED in the WORD key will turn on (indicating that the instrument is in the word editing mode) and the display will show the bit sequence of the current word pattern in binary format. The word may contain either one or two bytes, that is 8 or 16 bits. Word length (8 or 16) is displayed after the word's bit sequence.
3. If you need to change word length, press the WORD LENGTH key and then the pattern up or down key to toggle word length between 8 and 16 bits. When the desired word length is displayed, press the WORD key to return to the word editing mode.
4. To select the first or second byte in a 16-bit pattern, press the up or down key. The selected byte will be indicated in the display by an arrow located between the two bytes. Byte selection is not required for 8-bit patterns because the first byte is always selected.
5. To edit the selected byte, press the 1 (MSB) through 8 (LSB) bit keys to toggle individual bits between 0 (LED off) and 1 (LED on).
6. If you need to edit the other byte in a 16-bit pattern, repeat steps 4. and 5.

Instruments Equipped with 128K Option

Use the following procedure to create word patterns using front panel controls in instruments that are equipped with the 128K Option:

1. If you are using a previously saved pattern as the basis for the new pattern, recall this pattern from memory. (See Recalling Word Patterns).
2. Press the WORD key. The LED in the word key will turn on to indicate that the instrument is in the word editing mode. The selected byte in the current pattern will be displayed in the form AAAAA HH, where AAAAA is the byte's location or "address" within the current word in decimal, and HH is the value of the

selected byte in hexadecimal. Byte address will be in the range 0, 1, ..., 16383.

3. If you need to change word length, press the WORD LENGTH key and then the pattern up/down keys. Pattern lengths of 2048 bytes or less will be displayed in terms of M bytes plus N bits. Pattern lengths above 2048 bytes will be displayed in terms of bytes only. When the desired word length is displayed, press the WORD key to return to the word editing mode.
4. To select a byte within the current pattern, use the pattern up/down keys to increment or decrement the displayed byte address.
5. To edit the selected byte, press the 1 (MSB) through 8 (LSB) bit keys to toggle individual bits. Note that the LED in each bit key indicates whether the associated bit equals 0 (LED off) or 1 (LED on).

Repeat steps 4. and 5. until the word has been edited as required.

You have now created a new word pattern and may use it to perform tests. The current pattern is automatically stored in battery-backed memory. However if the new pattern is important, be sure to save it before creating or RECALLing another pattern.

Creating Word Patterns Using Menus

The menu functions used to create or edit word patterns are:

- LENGTH
- FILL
- EDIT and
- ORDER.

These functions are located in the WORD menu. Note that ORDER is a standard function while the LENGTH, FILL, and EDIT functions are added to the WORD menu as part of the 128K Option. Therefore in standard units, all word editing procedures, except for bit order, are performed using front panel controls. However in instruments equipped with the 128K Option, word editing may be performed using either front panel controls or the menu system, depending on which approach is more convenient in a given situation.

Note that the WORD menu also includes the PSYNC and SYNC functions. If you are trying to observe the Data output of the Generator, or the Monitor Data output of the Analyzer, you may want to use the PSYNC menu to select the byte location of the pattern synchronization pulse generated by the rear-panel PSYNC output. The SYNC menu, which appears on the same page of the Analyzer menu system, is not directly involved in creating or editing word patterns. Rather, it is used to set the Analyzer pattern synchronization threshold in terms of BER.

A detailed explanation for each function in the WORD menu may be found in Chapter 6. In addition, the general procedure for creating word

patterns in a Generator or Analyzer equipped with the 128K Option is given below:

1. Use the current pattern or recall a previously saved pattern as the basis for the new pattern. (See Recalling Word Patterns).
2. Press the F1 key to enter the menu system.
3. If you need to change current word length, select the LENGTH menu by pressing F3. Enter a new value for length using the F2, F3, and pattern up/down keys. Then exit the LENGTH menu by pressing either F4 to set this new length or F1 to "escape" without making any setup changes.
4. If you want to fill a pattern, select the FILL menu by pressing F4. Edit the fill byte using the individual bit keys, 1 (MSB) through 7 (LSB). When done, exit the FILL menu by pressing either F4 to automatically load this eight bit pattern into every byte of the current word or F1 to "escape" without making any setup changes.
5. To edit the current word, press F2 to enter the EDIT menu. Use the F2, F3, and pattern up/down keys to select a byte within the current word. Next, use the bit keys to edit the displayed byte. Repeat for each byte to be edited. When done, exit the EDIT menu by pressing either F4 to lock in these changes or F1 to "escape" without making any setup changes.
6. You now may want to access the ORDER and PSYNC menus by pressing F1 (MORE). The ORDER menu determines the bit transmission/analysis order of each byte in the pattern, that is MSB or LSB first. The PSYNC menu determines the byte location of the pattern sync pulse in long word patterns. When done with these menus, press the F1 key until the normal display format appears.

You have now created a new word pattern and may use it to perform tests. As noted earlier, the current pattern is automatically stored in battery-backed memory. However if the new pattern is important, be sure to save it before creating or recalling another pattern.

Creating Word Patterns Under Remote Control

The third way to create word patterns is by remote control. There are two sets of word editing commands: "word" and "byte". Word commands, also known as "short word" commands, are part of the standard command set and are used to perform 8 and 16 bit editing functions. Byte or "long-word" commands, which are added to the *gigaBERT700* Generator or Analyzer command as part of the 128K Option, are used to perform editing functions on words of any allowed length up to 16384 bytes. Note that most word commands will function normally in instruments equipped with the 128K Option. This allows instruments equipped with the 128K Option to operate in automated test applications designed around the 8/16-bit word command set. However only byte commands may be used to edit long word

patterns—that is words that are more than 16 bits long. Therefore a *gigaBERT700* Generator or Analyzer must be equipped with the 128K Option to function in automated test applications designed around the byte command set.

A general discussion of *gigaBERT700* remote control functions and an explanation of each remote command may be found in Chapters 7. and 8. In addition, the general procedure for using byte commands to create and edit word patterns is given below:

1. All long-word editing procedures must start with an EDIT_BEGIN command, which may have an argument from -1 to +7. An argument of -1 tells the instrument to copy the current word pattern into "scratchpad" memory, while arguments of 0 through 7 tell the instrument to copy the indicated saved word pattern into scratchpad memory.
2. The core of a long-word editing procedure is constructed from byte commands such as BYTE_BLOCK, BYTE_FILL, BYTE_INSERT, BYTE_EDIT, and BYTE_DELETE. These commands may be used to download a new pattern into scratchpad memory, or to modify a pattern previously copied or downloaded into scratchpad memory.
3. All long-word (byte) editing procedures must end with an EDIT_END command. This command may have an argument from -2 to +7. An argument of -2 tells the instrument to discard the pattern in scratchpad memory and not to update the front panel. An argument of -1 tells the instrument to copy the pattern in scratchpad memory to the current word memory location and to update the front panel. Arguments 0 to +7 tell the instrument to copy the pattern in scratchpad memory to the indicated (save) memory location without updating the front panel.

Note that a word or byte editing session in a *gigaBERT700* Generator or Analyzer can be started locally from the front panel or remotely via the instrument's RS-232 or GPIB remote ports. However the instrument will allow only one editing session to be in-progress at any given time.

Saving Word Patterns

You can save the current word pattern to one of eight word memory locations (WORD 0 to WORD 7), using the following procedure:

1. Press the SAVE key. The LED in the SAVE key should flash to indicate that you are in the save mode.
2. Press the pattern up/down keys to select a word memory location. Note that the word previously stored in this location will be overwritten.
3. Press the SAVE key again to save the current word into the selected location. At this point the SAVE LED will turn off.

Recalling Word Patterns

To recall a previously saved word pattern, use the following procedure:

1. Press RECALL to enter the recall mode. Note that the LED in the RECALL key turns on.

☑ **NOTE**: If the current word is important and has not been previously saved, you must save it before pressing RECALL. The recalled pattern will overwrite the current pattern.

2. Select a word pattern memory location by pressing the pattern up/down keys. The eight possible word memory selections are WORD 0 through WORD 7. In addition, if the 128K Option is installed, you will see the following five mark density pattern selections: MRK 1/8, MRK 1/4, MRK 1/2, MRK 3/4, and MRK 7/8. The selected word becomes the current word immediately. In other words, the current word is over-written each time you press the up or down key.
3. You can now use the recalled word to perform tests. Note that if you want to edit the recalled word, you must press the WORD key again.

Generator Functions

This section defines key functions of the *gigaBERT700 Generator* and how to set up these functions using front panel controls.

Clock Source and Frequency

The Generator can operate using its internal clock, or an external clock source. The CLOCK section of the Generator front panel is used to select clock mode (internal or external), set internal clock frequency, and store or recall user-defined frequencies. In addition, the CLOCK section contains an input for an external clock source. When using the internal clock, you may set frequency directly, or recall one of 10 previously saved frequencies from memory. The frequency save/recall feature is especially useful if you often switch back and forth between a limited number of different frequencies.

The External Clock Input

When the Generator is in external clock mode, a clock source must be connected to the connector labeled INPUT in the CLOCK section of the Generator's front panel. The operating bit rate of the Generator will then be determined by the frequency of this source. However, when the Generator is set to internal clock mode, any signal applied to this input will be ignored.

The External Clock Input will accept clock signals with frequencies from 150 kHz to 700 MHz. The signal does not have to be continuous—that is, it may contain periods of inactivity. However the signal must start and end with a complete clock cycle, that is a negative-to-positive and a positive to negative transition pair. A non-continuous clock is also called a BURST clock.

External Clock Input Termination

The termination of the external clock input may be set to -2 V or ground as follows:

Procedure:

1. Press the F1 key to enter the Generator menu system.
2. Press F1 (MORE).
3. Press F2 (CLOCK).
4. Use the up/down keys in the PATTERN section to select one of the following:
   a. **GND** (ground)
   b. **-2 V**.
5. Press F4 to set or F1 to exit without change.
6. Press F1 to exit the menu system.

The input switching threshold of the external clock input depends on the selected termination, as shown in Table 4-1.

Table 4-1 External Clock Input Specifications vs. Termination

Termination	Switching Threshold	Amplitude Range*
50 Ω to ground	Ground ± 50 mV	500 mV to 2 V peak-to-peak, centered on ground.
50 Ω to -2 V	-1.3 V ± 50 mV	500 mV to 1.4 V peak-to-peak, centered on -1.3 V.

* These pk-pk amplitude limits are based on the requirement that signals applied to the external clock input must cross the decision threshold by at least 200 mV, but at the same time not exceed overall limits of -2 V to +2 VDC.

Clock Source

Generator clock source may be set to internal or external using the EXT key in the CLOCK section. When the LED in the EXT key is off, then clock source is internal. If the LED is on, the clock source is external and an external source must be connected to the external clock input (INPUT).

Procedure:

- ❑ Press the EXT key to toggle clock source between internal and external.

Step Size and Frequency

The frequency of the Generator internal clock may be set using the FREQUENCY, STEP, and CLOCK section up/down keys. First select a step size. Then adjust current frequency using this step size. The complete setup procedure follows:

Procedure:

1. Select a step size. Do this by pressing the STEP key one or more times until the underscore in the frequency field is under the desired digit. Note that the underscore moves right one digit for each key press. The selected digit indicates step size. For example if the current frequency is 622.950 MHz, and the underscore is under the "5" , then current step size is 10 kHz. Or, if the underscore is under the "9" then the current step size is 100 kHz, etc.
2. Press the FREQUENCY key. Verify that the FREQUENCY key LED turns on.

3. Press the clock section up/down keys to increment or decrement the current frequency using the previously selected step size. Note that the underscore position indicates a step size, not which digit will be edited. For example if displayed frequency is 622.950, and the cursor is under the "9", then step size is 100 kHz and pressing the up (↑) key one time will change frequency to 623.050 MHz.

Saving a Frequency

You may save the current Generator frequency into one of 10 frequency memory locations as follows:

Procedure:

1. Press the clock SAVE key. Verify that the SAVE LED is flashing.
2. Press the clock section up/down keys to select the desired memory location . Note that frequency memory location is displayed in the bottom left field of the display as FREQ x, where x = 0, 1, ..., 9.
3. Then press SAVE a second time to save the current frequency into this location. Verify that the clock SAVE key LED turns off.

Recalling a Frequency

You can recall a previously saved frequency as follows:

Procedure:

1. Press the clock RECALL key and verify that the RECALL LED turns on.
2. Press the clock up/down keys until the display shows the desired frequency (top left) and frequency memory location (bottom left).

☑ **NOTE**: The displayed frequency becomes the current frequency immediately. That is, you do not have to hit RECALL again.

Data and Clock Outputs

This section explains how to set up the Generator's clock and data outputs as well as related pattern sync. and clock/4 outputs.

Overview

The OUTPUT section of the Generator front panel contains the instrument's main NRZ (clock + data) outputs:

- **DATA**
- **DATA-BAR**
- **CLOCK**
- **CLOCK-BAR**

DATA and CLOCK are the non-inverted test pattern outputs of the *gigaBERT700* Generator. DATA is a non-return to zero (NRZ) data signal and CLOCK is its corresponding clock signal. DATA-BAR and CLOCK-BAR are complementary outputs to DATA and CLOCK respectively. Thus the *gigaBERT700* can drive single-ended or differential inputs.

The amplitude and baseline offset of the CLOCK and DATA outputs are adjustable. This insures compatibility with a wide range of input circuit designs. The selected clock amplitude applies to both CLOCK and CLOCK-BAR and the selected data amplitude applies to both DATA and DATA-BAR. Similarly the selected clock baseline offsets becomes the bottom (negative peak voltage) of both the CLOCK and CLOCK-BAR outputs and the selected data baseline offset becomes the bottom voltage of the DATA and DATA-BAR outputs. The nominal waveform and phase relationship of the four output signals is shown in Figure 4-1. An equivalent circuit model for these four outputs is shown in Figure 4-2.

Figure 4-1 Nominal Generator Clock and Data Waveforms Showing Amplitude, Baseline Offset, and V_{top}.

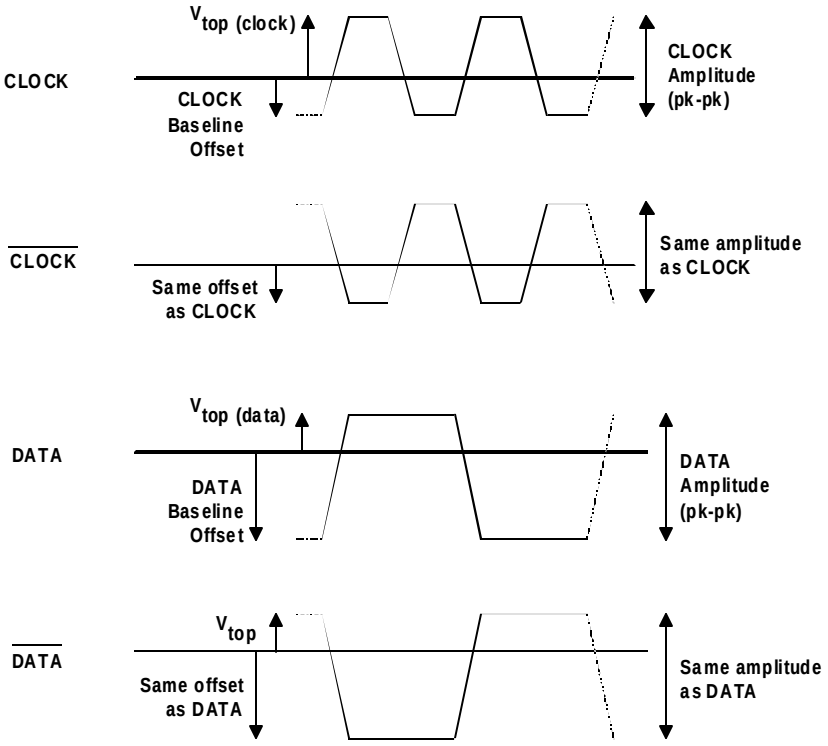

Figure 4-2 Generator Clock and Data Output Equivalent Circuits

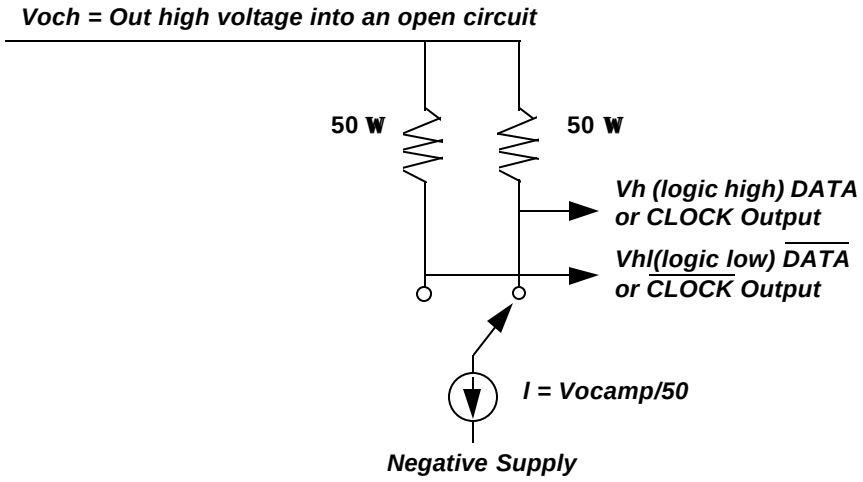

Amplitude and Baseline Offset

The rules governing the setup of clock and data amplitude and baseline offset are as follows:

- **RULE 1**: When terminated by 50 ohms to ground, the amplitude adjustment range of clock and data outputs is **0 to 2 V peak-to-peak**. However, the absolute voltage of the **pulse top cannot exceed +2.8 VDC**, that is:

$$V_{\text{amplitude p-p}} + V_{\text{offset}} \leq 2.8 \text{ VDC}$$

- **RULE 2**: When left unterminated (termination impedance > 2 kΩ) the amplitude adjustment range of clock and data outputs is **0 to 4 V peak-to-peak** with a pulse top limit of +5.6 VDC, that is:

$$V_{\text{amplitude p-p}} + V_{\text{offset}} \leq 5.6 \text{ VDC}$$

- **RULE 3**: Displayed amplitude and baseline offset are calibrated for a termination of 50 ohms to ground. Any variation of termination impedance or voltage will cause actual amplitude and offset to differ from the values shown in the Generator display.

These rules are summarized in Table 4-2.

Table 4-2 Output Setup Rules vs. Termination Impedance

Termination	Amplitude Limit (V pp)	Pulse Top Limit (VDC)	Actual Amplitude	Actual Baseline Offset (VDC)
50 Ω to ground	0 - 2	+2.8	as displayed	as displayed
50 Ω to +3 VDC	0 - 2	+ 2.8	as displayed	displayed value + 1.5 V
50 Ω to -2 VDC	0 - 2	+2.8	as displayed	displayed value - 1.0 V
AC (50 Ω to AC)	0 - 2	+2.8	as displayed	unspecified
Open Circuit	0 - 4	+ 5.6	2 x displayed	as displayed

The following controls are used to set clock and data output amplitude and baseline offset:

- **CLOCK**:
- **DATA**:
- **AMPLITUDE (- , ¯)**:
- **BASELINE OFFSET (- , ¯)**:

Note that when the CLOCK key is pressed, its LED turns on and the display shows clock output amplitude and offset. Similarly, when the DATA key is pressed, its LED will turn on and the display shows data

output amplitude and offset. The general procedure for setting data and clock output amplitude and baseline offset is shown below.

Procedure:

1. Press DATA. The display will show data output amplitude and offset.
2. Press the BASELINE OFFSET up/down keys to set the desired data signal baseline offset.
3. Then press the AMPLITUDE up/down keys to set the desired data signal amplitude.
4. Press CLOCK. The display will now show clock output amplitude and offset.
5. Press the BASELINE OFFSET up/down keys to set the desired clock signal baseline offset.
6. Then press the AMPLITUDE up/down keys to set the desired clock signal amplitude.

Logically Inverting Output Data

The INVERT DATA key may be used to logically invert the output data pattern, that is change all 1s to 0s and 0s to 1s. If the INVERT DATA LED is off, then the output data pattern is not inverted. However if the INVERT DATA LED is on, the output data pattern is logically inverted. You can toggle the INVERT DATA function on and off by pressing the INVERT DATA key. Note that logically inverting the output pattern is the same as swapping the connections to the DATA and DATA-BAR outputs.

Procedure:

- ❑ To toggle output data inversion on or off, press the INVERT DATA key.

Single-ended or Differential Operation

DATA-BAR and CLOCK-BAR are complimentary outputs to DATA and CLOCK respectively. Therefore, to drive a single-ended clock or data input simply connect appropriate true output (CLOCK or DATA) while terminating its compliment (CLOCK-BAR or DATA-BAR) with 50 ohms to ground. Or, to drive a differential clock or data input, connect the appropriate true output (CLOCK or DATA) to the non-inverting input and the complimentary output (CLOCK-BAR or DATA-BAR) to the inverting input. No other setup is required to configure the Generator for singled-ended or differential operation.

Procedure for Single-ended Operation:

1. For singled-ended operation, connect Generator CLOCK and DATA outputs to singled-ended inputs on the DUT.

2. Terminate the CLOCK-BAR and DATA-BAR outputs with 50 ohms to ground.

Procedure for Differential Operation:

1. Connect CLOCK and CLOCK-BAR outputs of the Generator to the true and complimentary clock inputs on the DUT.
2. Connect DATA and DATA-BAR outputs of the Generator to the true and complimentary data inputs on the DUT.

PSYNC and CLOCK/4 Outputs

The OUTPUT section of the Generator front panel contains two additional outputs that may be useful when observing the Generator output with an oscilloscope. The first is the PSYNC or "pattern sync" output which generates one pulse per pattern frame. This signal may be used to trigger an oscilloscope at a particular section of the output data pattern. The second is the CLOCK/4 output, which is a clock signal at one quarter the frequency of CLOCK. This signal is particularly useful when viewing the output of the Generator using an oscilloscope that doesn't have sufficient bandwidth to trigger on the CLOCK signal.

Both the PSYNC and CLOCK/4 outputs have a fixed amplitude of 200 mV pk-pk, centered around ground, when terminated by 50 ohms to ground. The phase relationship of CLOCK/4 and CLOCK is also fixed, with the nominal location of CLOCK/4 transitions occurring on the falling edge of CLOCK.

The width and location of the PSYNC pulse depends on which pattern type is currently active. For PRBS patterns, the PSYNC pulse has a width equal to one bit time slot, at a fixed position not adjustable by the user. For short-word patterns (128K Option not installed) the PSYNC waveform is a nominal square wave that is high during the first byte of a 16-bit word, and low for the second. For long-word patterns (128K Option installed), the PSYNC pulse is one byte wide that occurs at a byte position adjustable by the user with the PSYNC parameter in the TEST menu.

☑ **NOTE**: The PSYNC parameter will appear in the TEST menu only if the 128K Option is installed.

Procedure to set PSYNC location:

1. Press F1 to enter the menu system.
2. Press F4 to selected WORD.
3. Press F1 to select MORE
4. Press F4 to enter the PSYNC menu.
5. Use the F2, F3, and pattern up/down keys to enter a byte address.
6. Press F4 to set this address, or F1 to escape without making a change.
7. Press F1 several more times until you see the normal format on the display.

Error Injection

The *gigaBERT700* Generator can inject bit errors, also known as logic errors, into the output data pattern. One use of error generation is to self-test the *gigaBERT700* Generator/Analyzer system. Or, when generating word patterns containing simulated framed signals, for example a SONET signal, error generation can be used to determine the ability of the terminal under test to detect errors or to stay in-frame in the presence of high error rates.

The available internal error injection rates are 10^{-n}, where n = 7, 6, 5, 4, or 3. In other words, injected BER can be set to integer powers of 10 from 10^{-7} to 10^{-3}. Using the external error inject mode, errors can be injected at any rate up to 10^{-3}. There is no lower limit on external error injection BER.

Selecting an Error Inject Mode

The controls that determine the error injection mode of the Generator are:

- ❑ RATE (key)
- ❑ SINGLE (key)

When the LED on the RATE key is off, the Generator is in the single error inject mode. In this mode, no errors are generated except when the SINGLE error key is pressed. That is, each press of the SINGLE key will cause a single, isolated bit error to be injected. However, when the RATE key is on, the instrument is either generating an error rate internally, or under external error generation control. You can determine which by observing the bottom, middle field of the display.

If an error rate is displayed (e.g. ERR 1E-09) then the Generator is in the internal error inject mode. If the message EXT ERR is displayed, then the external error inject mode has been selected indicating that the signal appearing at the rear-panel EXTERNAL ERROR INJECT input will control error injection rate. One error will be generated for each negative-to-positive transition in this signal. In all other error inject modes, the signal appearing at this input will be ignored.

☑ **NOTE**: In all error injection modes, the ERROR LED will flash each time an error is injected.

Procedure to Control Error Injection Mode:

1. Press the RATE key one or more times to select the desired error injection mode. Note that the LED in the RATE key will turn on except when mode is set to ERR OFF. Available selections are:
   - ❑ ERR OFF: Single inject mode.

- ERR $1E^{-7}$: Internal rate of 10^{-7}.
- ERR $1E^{-6}$: Internal rate of 10^{-6}.
- ERR $1E^{-5}$: Internal rate of 10^{-5}.
- ERR $1E^{-4}$: Internal rate of 10^{-4}.
- ERR $1E^{-3}$: Internal rate of 10^{-3}.
- ERR EXT: External error inject mode.

2. Once you have selected an internal error rate, or the external mode, you can turn this error rate off and on by alternately pressing the SINGLE key and RATE key. Do not press the RATE key two or more times in a row unless you want to change the current error injection mode. However, while the current error rate is off, you can press the SINGLE key as many times as you wish to inject single errors.
3. To return to the single injection mode, press RATE one or more times until ERR OFF is selected.

ERROR INJECT Input

The ERROR INJECT input is a BNC (female) connector located on the rear-panel of the Generator. When the error injection mode is set to ERR EXT, one bit error will be generated for each rising edge in the signal applied to this input.

Setup

The ERROR INJECT is a 50 ohm, ECL input. No hardware setup is required.

Data Inhibit

The DATA INHIBIT input is located on the rear-panel of the Analyzer. A signal applied to this input may be used to gate off and on the Generator DATA output signal. The logic of the DATA INHIBIT function is shown in Table 4-3. The DATA INHIBIT function is not bit or frame synchronized with the DATA output signal. Therefore, the gating action caused by the DATA INHIBIT input may occur anywhere within a DATA output bit time slot and anywhere within a pattern frame. DATA INHIBIT is a standard 50 ohm ECL input and does not require any threshold or delay setup.

Table 4-3 Data Inhibit Logic

Logic Level Applied to DATA INHIBIT INPUT	Action
OPEN or LOW	DATA output operates normally.
HIGH	DATA output is disabled, that is forced LOW.

Analyzer Functions

This chapter explains how to enable or disable Analyzer automatic synchronization functions. It further shows how to manually set Analyzer input parameters and error detection functions, and how to start tests, view results, and print results. The chapter also defines all results calculated by the Analyzer.

Automatic Setup Functions (SYNC)

This section explains how to use the following "SYNC" controls and indicator in the ERROR DETECTION section:

- ❑ AUTO SEARCH key.
- ❑ DISABLE key.
- ❑ LOCK indicator.

Overview

AUTO SEARCH Key

The AUTO SEARCH key is used to enable or disable the auto-search feature. When auto-search is enabled, the Analyzer will automatically attempt to set the following parameters each time pattern synchronization is lost:

1. clock and data input threshold,
2. data input delay,
3. PRBS pattern,
4. pattern polarity, and
5. pattern alignment.

In addition, auto-search will clear (turn off) the BIT and PHASE history indicators once pattern sync. is regained. Thus, AUTO SEARCH can greatly simplify Analyzer setup and operation, especially when the input clock and data phase relationship and amplitudes are not known.

DISABLE Key

The DISABLE key is used to *disable* automatic pattern realignment. When automatic pattern realignment is enabled (DISABLE off) the Analyzer will attempt to resynchronize its pattern detector each time BER goes above the pattern synchronization threshold *by looking for a new pattern alignment*. A change of pattern alignment will occur, for example, if a buffer over flows or under flows in the DUT. A change of pattern alignment will also normally occur if the CLOCK input to the Analyzer is momentarily disconnected.

On the other hand, with pattern realignment disabled (DISABLE on), the Analyzer will not attempt to find a new pattern alignment—*even if BER goes above the synchronization threshold*—until the start of a new test interval. This allows the analyzer to measure BER and count errors on signals with very high error rates.

LOCK Indicator and Actions Taken by the Analyzer if Synchronization (Lock) is Lost

The LOCK LED indicates whether or not BER is above or below the current synchronization threshold. The LOCK indicator will turn on while BER is below the current synchronization threshold, and off while BER is above this threshold. The setup actions taken by the Analyzer when BER crosses the synchronization threshold will depend on the state of the AUTO SEARCH and DISABLE keys, as shown in Table 5-1.

Table 5-1 Actions Taken by Analyzer when Synchronization is Lost

AUTO SEARCH	DISABLE	Action when synchronization is lost (LOCK LED turns off)
on	off	Analyzer will attempt to find new pattern alignment, input level, input delay, PRBS pattern and pattern polarity
off	off	Analyzer will attempt to find new pattern alignment.
off	on	No setup change—Analyzer will continue to measure BER and count errors.
on	on	(this combination not allowed)

AUTO SEARCH With PRBS Patterns

When using a PRBS pattern you can enable the AUTO SEARCH feature as follows:

Procedure:

1. Set up the Generator to transmit a PRBS pattern.
2. Set up the Analyzer as follows:
   - ❑ EXT (ref. data input control) off
   - ❑ SYNC DISABLE off
   - ❑ AUTO SEARCH on

After you perform this procedure, the auto-search feature will be enabled and the instrument will immediately attempt to re-synchronize with the received test signal. Once lock is achieved—that is once BER goes below the synchronization threshold—the BIT and PHASE history indicators will be cleared (turned off) and all current error counts will be reset to zero. The SYNC LOSS indicator will remain on, however, until cleared by the user.

☑ **NOTE**: The AUTO SEARCH feature will work over a wide range of conditions. Therefore if you have set up the Generator to generate a standard PRBS, enabled the AUTO SEARCH feature on the Analyzer, but the Analyzer LOCK LED still fails to turn on, then it is likely that a problem exists in the device under test or your patch cord connections.

AUTO SEARCH with "Non-PRBS" Patterns

In cases where you need to use a word or other type pattern for testing, you can still use AUTO SEARCH to set DATA and CLOCK threshold, and DATA input delay and threshold as follows:

Procedure:

1. Set up the Generator to transmit a PRBS pattern.
2. Enable Analyzer AUTO SEARCH as follows:
   - ❑ EXT (ref. data input control) off
   - ❑ SYNC DISABLE off
   - ❑ AUTO SEARCH on
3. After the Analyzer LOCK LED turns on, disable AUTO SEARCH by pressing the AUTO SEARCH key. Verify that the LED in the AUTO SEARCH key turns off.
4. Change the pattern setup of the Generator and Analyzer as desired. For example, to perform a test using a word pattern stored in

memory: press the Analyzer pattern RECALL key and up/down keys to select the word pattern. Repeat these steps on the Generator to select the same word pattern. At this point the SYNC LOCK LED should turn on again indicating that the Analyzer has regained synchronization. You may now start a new test interval by clearing previous results (PRESS ERROR DETECTION CLEAR key) and history indicators (PRESS HISTORY CLEAR key).

How to DISABLE Automatic Pattern Resynchronization

The pattern resynchronization disable feature is turned on or off as follows:

Procedure:

- ❑ Press the DISABLE key to toggle automatic pattern resynchronization on or off. When the DISABLE LED is on, pattern resynchronization is *disabled.* When the DISABLE LED is off, pattern resynchronization is *enabled.*

Relationship between AUTO SEARCH and DISABLE.

Turning AUTO SEARCH on automatically turns DISABLE off. Similarly, turning DISABLE on automatically turns AUTO SEARCH off. That is, AUTO SEARCH and DISABLE cannot be on at the same time. However you may turn both functions off. There are, therefore, three possible levels of Analyzer synchronization:

1. AUTO SEARCH on: This is the most automated mode.
2. AUTO SEARCH off and DISABLE off: This is a partially automated mode with AUTO SEARCH functions disabled but auto-pattern resynchronization still enabled.
3. DISABLE on: This is the "fully manual" mode in which all AUTO SEARCH functions and the auto-pattern resynchronization function, are disabled.

Synchronization (LOCK) Threshold

The current synchronization threshold depends on pattern, and the setup of the SYNC menu, as summarized in Table 5-2 below:

Table 5-2 Synchronization Threshold

Pattern Type	Threshold	How to Set
PRBS	1,024 errors in 4,096 bits (BER = 2.5 E-01)	Fixed
All word patterns (up to 16 bits) when 128K Option **not** installed.	256 errors in 4,096 bits (BER = 6.3 E-02)	Fixed
All word, mark density, or other ROM patterns with 128K Option installed.	Based on 256 errors in a rolling window of x bits. Nine BER levels available: **1:** 3.1 E-02 **2:** 7.8 E-03 **3:** 1.9 E-04 **4:** 9.7E-04 **5:** 4.8 E-04 **6:** 2.4 E-04 **7:** 1.2 E-04 **8:** 6.1 E-05 **9:** 3.0 E-05	Use **SYNC** menu to select a synchronization level from 1 to 9.

You can change the synchronization threshold for (long) word, mark density, and ROM patterns using the SYNC menu as follows:

Procedure to Set SYNC Threshold:

1. Press the F1 key to enter the menu system.
2. Press F4 (MORE) **two** times.
3. Press F2 (SYNC).
4. Use the pattern up/down keys to select a synchronization threshold level from 1 to 9.
5. When done, press F4 to enter your choice.
6. Press F1 multiple times until you have exited the menu system.

☑ **NOTE**: See Chapter 5 for a further explanation of the SYNC menu.

Clock, Data, and Reference Data Inputs

This section explains how to set up Analyzer clock, data, and reference data inputs using front panel controls and menus.

Overview

The Analyzer CLOCK, DATA, and REF DATA inputs are designed to accommodate a wide range of output logic levels and circuit designs. An equivalent circuit diagram of the Analyzer input section is shown in Figure 5-1.

Figure 5-1 Analyzer Clock and Data Input Equivalent Circuits

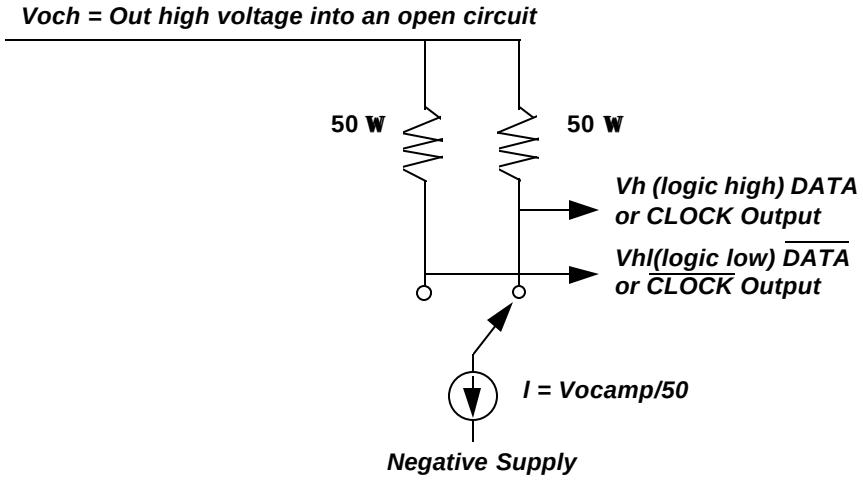

Input Parameters

The following input parameters may be set manually by the user or automatically by the AUTO SEARCH function:

- Decision threshold (CLOCK, DATA, and REF DATA)
- Delay (DATA and REF DATA)
- Inverted or non-inverted data (DATA).

In addition, there are two parameters that can be selected only by the user:

- Termination (CLOCK, DATA, and REF DATA)
- Single-ended or differential operation (CLOCK, DATA)

Note that user or manual control functions may be executed locally, via front panel controls or menus, or remotely via the instrument's RS-232 or GPIB ports.

Controls

The INPUT section controls that are used to set up input parameters are:

- ❑ DELAY key
- ❑ DIFF key
- ❑ TERM key
- ❑ THRESH key
- ❑ INPUT (↑, ↓) Keys
- ❑ INVERT key
- ❑ THRESH key

In addition, the state of the F2 and F3 function keys determines the action of the INPUT up/down keys as shown in Table 5-3. Note that this function of the F2 and F3 keys does not apply while the Analyzer is in the menu mode.

Table 5-3 How F2 and F3 Determine Which Input Can be Set Up

F2	F3	Input that can be adjusted using the (- , ¯) Keys
off	off	DATA
on	off	CLOCK
off	on	REF DATA
on	on	not allowed

Use of the Display

The Analyzer display will normally show the currently selected delay parameter (DATA or REF DATA) in the bottom left field and the currently selected threshold parameter (CLOCK, DATA, or REF DATA) in the bottom right field. In addition the bottom middle field will show whether or not input data inversion is enabled. Specifically, if the INVERT DATA key is on, then the message INV will appear after the name of the current pattern, for example PN 23 INV.

Input Data Delay

Up to 4 ns of delay can be added to the DATA and REF DATA inputs to adjust their phase alignment with the input clock signal. A different amount of delay may be added to each of these inputs so that the Analyzer can accommodate different phase relationships between DATA, REF DATA, and CLOCK.

Procedure to Add Delay:

1. Select either the DATA or REF DATA inputs using the F2 and F3 keys.
2. Press the DELAY key. Verify that its LED turns on.
3. Press the input up/down keys while observing the amount of added delay in the bottom left field of the display. Delay may be set in the range 0 to 4 ns, in 20 ps steps.

The delay value shown in the display is in effect immediately. In other words, delay is changed each time you press the up or down key. Note that delay is an AUTO SEARCH parameter. Therefore, you should normally turn off AUTO SEARCH if you want to fix delay at a specific value.

Input Termination

The input termination can be independently selected for the CLOCK, DATA, and REF DATA inputs. Note that the termination selected for CLOCK and DATA also applies to the CLOCK-BAR and DATA-BAR inputs. Available input terminations are shown in Table 5-4.

Table 5-4 Input Terminations for CLOCK, DATA, and REF DATA

Label	Termination
GND	50 ohms to ground.
- 2 V	50 ohms to -2 VDC.
+ 3 V	50 ohms to +3 VDC.
AC	50 ohms, via 0.01 μF capacitor, to ground.

Procedure for Selecting Input Termination:

1. Select the DATA, CLOCK, or REF DATA inputs using the F2 and F3 keys.
2. Press the TERM key. Verify that its LED turns on.
3. Press the input up/down keys while observing the selected termination in the display. Available terminations are: GND, -2V, +3V, and FLT.

The displayed termination becomes effective immediately. In other words, termination is changed each time you press the up or down key.

Low-Frequency Effects of FLT Termination on Single-ended Operation.

Because the single-ended AC termination is AC-coupled to ground, input impedance will deviate from the nominal 50 ohm value at low frequencies. As a practical matter, for any PRBS pattern analyzed by the *gigaBERT700*, frequency effects will not be noticed until the peak energy frequency is less than about 10 MHz, which for PRBS patterns will occur only when bit rate is less than about 20 Mb/s. However, for word patterns with long strings of contiguous zeros, effects may be noticed at higher bit rates.

Note from Figure 5-1 that when the AC termination is used with differential operation, the input termination is not "AC-coupled". Therefore, the above low-frequency limit on use of the AC termination does not apply when operating the CLOCK or DATA inputs in the differential mode. Specifically, when the Analyzer clock or data inputs are set up for differential operation, the AC termination may be used over the entire bit rate operating range of the Analyzer.

Input Decision Threshold

The input decision thresholds of the CLOCK, DATA, or REF DATA inputs can be independently adjusted. However, it is important to note that input threshold adjustment applies only for *single-ended operation*. When operating Analyzer clock or data inputs in the differential mode, their input decision threshold effectively becomes the average of the positive peak and negative peak voltage levels and is not adjustable by the user.

Procedure to Adjust (Single-ended) Input Decision Threshold:

1. Verify that the selected input is set up for singled-ended operation.
2. Select either the DATA, CLOCK, or REF DATA input using the F2 and F3 keys.
3. Press the THRESH key. Verify that its LED turns on.

4. Press the input up/down keys while observing selected threshold value in the bottom, right field of the display. Decision threshold setup range is a function of input termination as shown in Table 5-5.

Table 5-5 Input Threshold Range as a Function of Termination

Selected Termination	Threshold Setup Range
GND	- 2.00 to + 4.00 VDC, 50 mV steps
- 2 V	- 3.00 to + 3.00 VDC, 50 mV steps
+ 3 V	- 1.50 to + 4.50 VDC, 50 mV steps
AC	- 2.00 to + 2.00 VDC, 50 mV steps

The displayed threshold takes effect immediately. In other words, threshold is incremented or decremented each time you press the up or down key. Note that threshold is an AUTO SEARCH parameter. So be sure turn off AUTO SEARCH if you want to fix delay at a specific value.

Logically Inverting Input Data

The INPUT section INVERT key may be used to logically invert the input data pattern, that is change all 1s to 0s and 0s to 1s. If the INVERT key is off, then the input data pattern is not inverted. However if the INVERT key is on, the input data pattern is logically inverted. You can toggle input data inversion on or off by pressing the INVERT DATA key. Note that logically inverting the input pattern is equivalent to swapping the connections to the DATA and DATA-BAR inputs.

Procedure:

- ❑ To toggle input data inversion on or off, press the INVERT key.

Singled-ended or Differential Operation

Analyzer clock and data inputs can be operated in a singled-ended or differential mode (See Figure 5-1). Differential operation provides greater immunity to ground noise and EMI. Note that threshold setup applies to the clock and data inputs only when they are operated in the singled-ended mode. When the clock or data input is operated in the differential mode, its input threshold effectively becomes the average of the positive peak and negative peak voltage of the received true and complement signals.

Procedure to Configure CLOCK or DATA Inputs for Differential Operation:

1. Select either the DATA or CLOCK input using the F2 and F3 keys.
2. Press the DIFF key to toggle the selected input between differential (LED on) and singled-ended (LED off) operation.

Selecting the Reference Data Mode

In most testing applications, the Analyzer is set up to compare the received data pattern with a data pattern generated internally by the Analyzer. However you may also set up the Analyzer to compare two externally generated patterns. This makes it possible to analyze framed or proprietary signals that cannot easily be simulated as long word patterns.

To configure the Analyzer for reference data testing, the primary or *test signal* must be connected to the Analyzer data input (which may be set up for singled-ended or differential operation) while the *reference signal* is connected to the REF DATA input. Then the Reference Data mode must be selected using the EXT key. Note that the reference signal must be generated by a singled-ended output.

Procedure for Selecting the Reference Data Mode:

1. Connect a test signal to the Analyzer data input and a reference signal to the REF input.
2. Press the Analyzer EXT key to toggle the reference mode on. Verify that the EXT key turns on.
3. To de-select the reference mode, press the EXT key again. Verify that the EXT key turns off.

Monitor Outputs

The MONITOR CLOCK and DATA outputs are provided so that you can monitor the test signal as seen by the Analyzer. This allows you to attach an error logging device, for example, to record the exact times that errors occur. Or, you may attach another type of instrument to make specialized calculations.

MONITOR DATA is an NRZ output signal with the same bit sequence as that recovered by the Analyzer front end circuit. MONITOR CLOCK is the corresponding clock signal. Because the MONITOR output is a regenerated version of the received test signal, bit errors reported by the Analyzer—due to noise on the received data (or clock) signals—will be present in the MONITOR DATA output bit sequence.

Output Setup

All three MONITOR ports (CLOCK, DATA, and PSYNC) are 50 ohm, ECL, single-ended outputs.

PSYNC Pulse Location

The PSYNC output consists of one pulse per pattern frame. This signal is provided to help you view the MONITOR DATA and CLOCK outputs with an external oscilloscope. As with the Generator, the Analyzer PSYNC pulse location is fixed for PRBS and short word patterns, but user-programmable for long patterns—that is, when the 128K Option is installed. Use the PSYNC parameter in the WORD menu to set long-word PSYNC pulse location as follows.

Procedure to Set Analyzer PSYNC Location:

1. Press the F1 key to enter the menu system.
2. Select WORD (F4).
3. Press MORE (F1).
4. Select PSYNC (F4).
5. Use the F2, F3, and pattern up/down keys to edit the PSYNC pulse byte location.
6. Press F4 to set this PSYNC location and exit the PSYNC parameter.
7. Press F1 multiple times to exit the menu system.

Error Detection Set Up

Overview

The *gigaBERT700* Analyzer calculates error results using three different methods: **Window**, **Test**, and **Totalize.** These three methods are independent of each other and can operate simultaneously. Window results are used to view current or "real-time" performance. Totalize results are generally used to view performance over long intervals. Test results are used to measure error performance over specified time intervals.

Two results are calculated for all three methods:

- BER
- Bit Errors

In addition, Test results include the following network performance parameters and event counts:

- Test seconds
- Total bits monitored
- Errored seconds
- Severely errored seconds
- Unavailable seconds
- Threshold errored seconds
- Error-free seconds
- Degraded minutes
- Signal loss seconds
- Pattern Synchronization loss seconds
- Phase error seconds

For explanations of these results see **Result Definitions** later in this chapter.

How TOTALIZE Results are Measured

Totalize results are measured continuously by the Analyzer. Totalize results can be cleared by the user (by pressing the CLEAR key when Totalize results are displayed). However, Totalize result accumulation is a continuous background process of the Analyzer and cannot be suspended by the user. The Totalize measurement process is illustrated in Figure 5-2.

Figure 5-2 The TOTALIZE Measurement Process

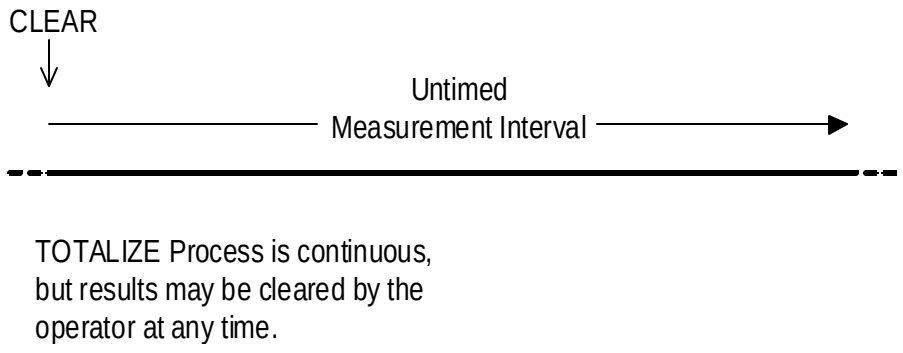

How WINDOW Results Are Measured

Window Mode results are calculated over an sliding window whose length is defined by the user. Window results can be cleared at any time by pressing the CLEAR key when Window Mode results are displayed. But as in the case of Totalize results, the Window measurement process cannot be suspended by the user.

Window results may be thought of as a series of snapshots of the received signal performance. Each snapshot indicates BER and total bit errors over the most recent interval T, where T is the value of the Window length set by the user. The amount of "slide" between snapshots is effectively determined by the display update rate which is about five times per second. Therefore the Window slide between display updates is about 200 ms. Note that End-of-Window reports are generated once per second so the effective window slide in printed results is one second. The Window measurement process is illustrated in Figure 5-3.

Figure 5-3 The WINDOW Measurement Process

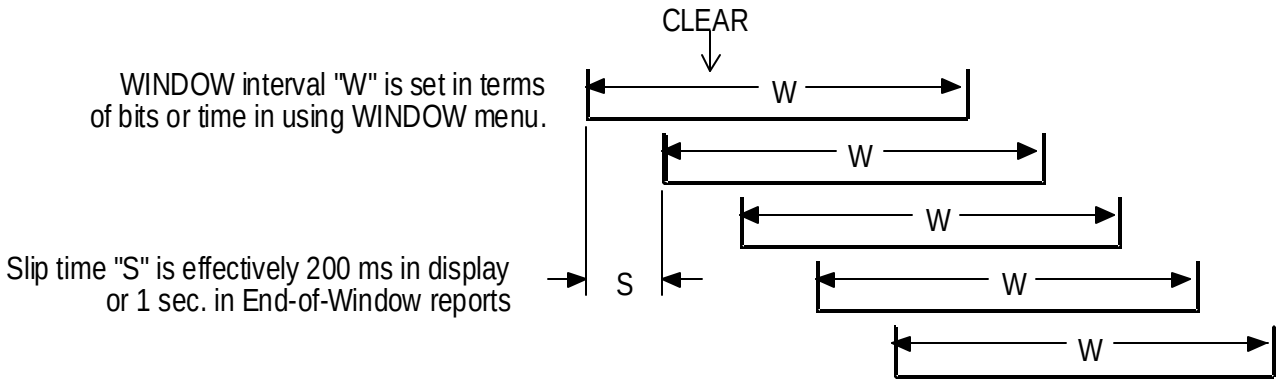

How TEST Results Are Measured

Unlike Totalize and Window results, the accumulation of Test results can be started or stopped by pressing the CLEAR key. That is, the CLEAR key in effect becomes a test start/stop key. While a test is "stopped", all current Test results are frozen. When the CLEAR key is pressed to start a new test, all current Test results are saved as previous Test results before current result registers are cleared.

As shown in Figure 5-4, Test results may be calculated using one of three timing modes: Timed, Untimed, or Repeat.

Figure 5-4 The TEST Measurement Process

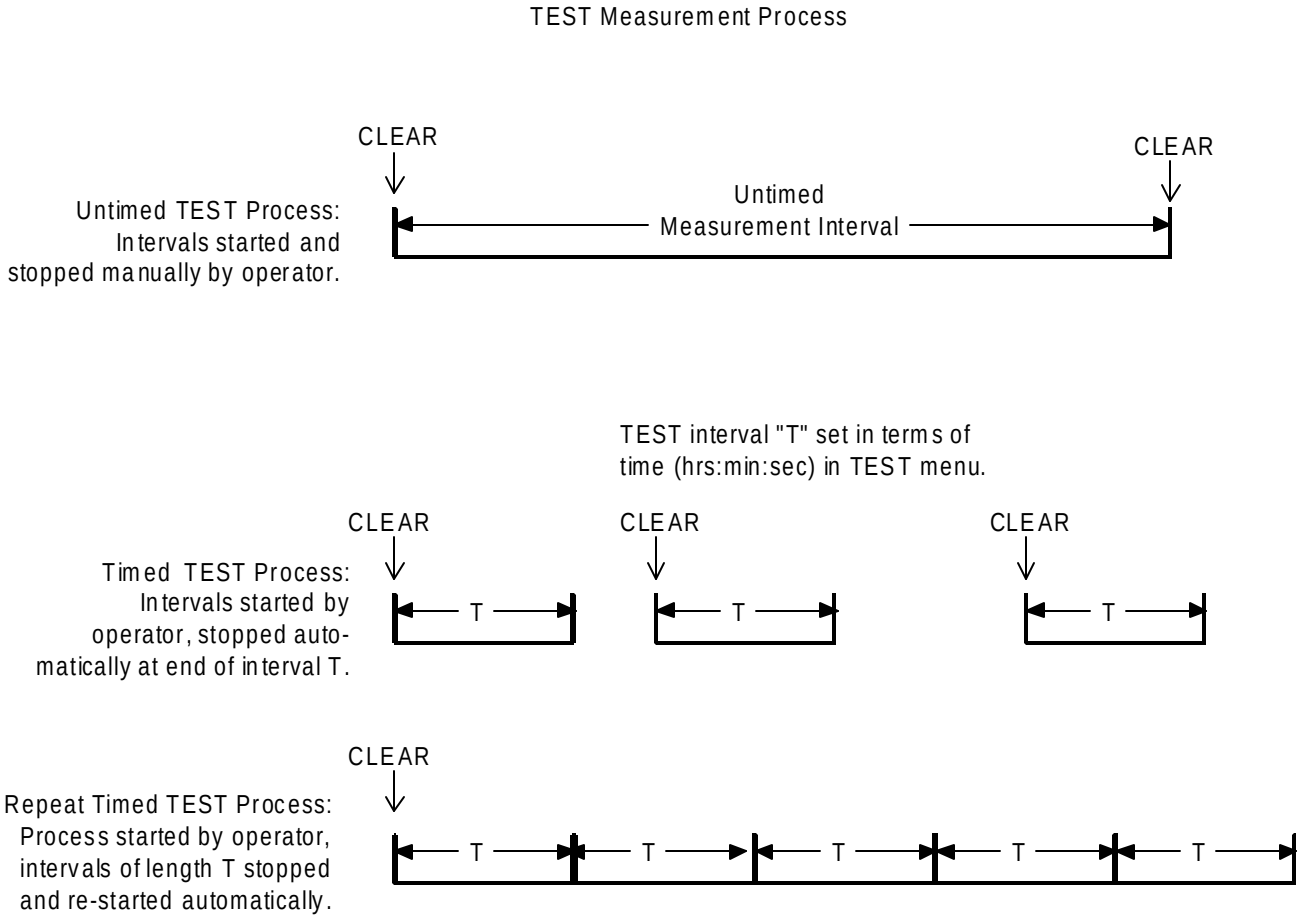

Timed Tests. When the *Timed* mode is selected, the Analyzer will automatically stop accumulating Test results after the test interval (specified by the user) has elapsed. All Test results will be frozen until the CLEAR key is pressed to begin a new test.

Repeat (Timed) Tests. When the *Repeat* mode is selected, the Analyzer will automatically stop and then restart a test after a user specified test length has elapsed. This process will continue until the user presses the CLEAR key to manually stop Test result accumulation.

Untimed Tests. When the *Untimed* mode is selected, the Analyzer will continue to collect Test results until the CLEAR key is pressed. At this point Test results will remain frozen until the CLEAR key is pressed again to start a new test.

Display Mode: Totalize, Window, or Test

When the Analyzer is not in the menu mode, you can select a display mode using the SELECT DISPLAY key. The display mode determines which BER and Bit Error results are shown in the main display. BER results are shown in the top, middle field of the display, while Bit Error results are shown in the top right field. Display mode also determines which results will be cleared when you press the ERROR DETECTION CLEAR key.

Procedure to Select a Results Display Mode:

- ❑ Press the DISPLAY SELECT key to select a different display mode. Selections are: **Totalize**, **Window**, or **Test**

The selected display mode will be indicated by the character in front of the BER result, as explained in Table 5-6 below. Note that there are three possible Test display mode characters (T, U, and R) which further indicate which Test timing mode (Timed, Untimed, or Repeat) has been set up. Note that MODE is a parameter in the TEST menu.

Table 5-6 How to Tell Which Display Mode is Active

Character In Front of BER Result	Indicated Result Display Mode
no character (blank)	Window
the infinity symbol (∞)	Totalize
T, U, or R	Test: T = Timed mode. U = Untimed mode R = Repeat mode

Clearing Results and Starting Tests

To do this:

1. Press DISPLAY SELECT until the Totalize Mode results are displayed (infinity character in front of the BER result).
2. Press the CLEAR key in the ERROR DETECTION section to clear Totalize BER and Bit Error results.

Totalize Process Set Up

The Totalize measurement process is active all the time and requires no explicit setup by the operator.

Window Process Set Up

The Window measurement process may be configured using the four parameters in the WINDOW menu:

- MODE: Defines window length in terms of "bits" or "seconds".
- BITS: Window length in bits.
- SECOND: Window length in terms of hours, minutes, and seconds.
- REPORT: Turns end-of-window reports on or off.

If you want to measure Window results, you must set the MODE parameter, and depending on your MODE selection, either the BITS or SECOND parameter. In addition, if you want to generate end-of-window reports you must also set the REPORT parameter to on.

Procedure:

1. Press F1 to enter the menu system.
2. Select the WINDOW menu (F3).
3. Within the WINDOW menu, set up:
   a. MODE (F2) and
   b. either BITS (F3) or SECOND (F4).
4. Press MORE (F1) to see the next page of the WINDOW menu.
5. If you are using a printer, set the REPORT parameter (F2) to on or off as required.
6. When WINDOW menu setup is complete, press F1 multiple times to exit the menu system.

See Chapter 5 for more information on setting up the WINDOW menu.

Test Process Set Up

The TEST menu contains the following six selections:

- LENGTH: Test length: hours, minutes, seconds.
- MODE: Test timing mode: Timed, Untimed, or Repeat.
- REPORT: Test reporting mode: None, Print On Error, or Both.
- THRESH: Threshold for the TES (threshold errored second) result.
- SQUEL: On Error report squelch after 10 consecutive seconds: yes or no.
- PRINT: Use this function to print current Test results immediately.

If you want to collect TEST results, you must set LENGTH and MODE before you begin a test. And if you are using a printer you should set the REPORT parameter as desired. Note that On Error reports can generate a lot of paper, so select On Error or Both with caution. Setup of the other parameters in the TEST menu are optional.

Procedure:

1. Press F1 to access the menu system.
2. Select the TEST menu (F2).
3. Within the TEST menu, set up:
   a. LENGTH (F2) and
   b. MODE (F3).
4. And, if you are using a printer, set up the REPORT parameter (F4).
5. Press MORE (F1) to see the next page of the TEST menu. Review the setup of the THRES (F2) and SQUEL (F3) parameters. Change if necessary.

☑ **NOTE**: Setting SQUEL (squelch) to ON is recommended.

5. Press the F1 key multiple times to exit the menu system.

See Chapter 5 for more information of setting up the TEST menu.

Viewing Results

BER and bit error results are shown in the normal display mode. However to view the complete list of Test results, you must use the TEST menu VIEW-CUR or VIEW-PRE functions.

BER and Bit Errors

The Analyzer calculates BER and bit errors using all three measurement methods (Totalize, Window, and Test). The current display mode determines which BER/bit error result pair is shown in the display. Note that BER is shown in the top, middle field while the bit error result is shown in the top, right field.

Procedure to View Desired BER and Bit Error Results:

- ❑ Press the DISPLAY SELECT key to select the appropriate display mode.

  As noted earlier, the character in front of the BER result will indicate the current display mode. The infinity symbol (∞) indicates Totalize; a blank character indicates Window; and the T, U, or R characters indicate Test results which have been measured using the timed, untimed, or repeat timing modes respectively.

All Other Results (Test Process only)

To view the complete set of Test results, select the VIEW-CUR or VIEW-PRE functions from the TEST menu. VIEW-CUR will show partial results if a timed test is in progress, or results from the last completed test. VIEW-PRE will show results saved in the "previous" test registers. These results are over-written with the contents of the current registers each time a test is completed.

Procedure:

1. Press F1 to enter the menu system.
2. Select the TEST menu (F2).
3. Press MORE (F1) twice to view the third page of the TEST menu.
4. Select either VIEW-CUR or VIEW-PRE to view all current or previous Test results respectively. Once inside either the VIEW-CUR or VIEW-PRE function, use the pattern up/down keys to scroll through the results list.
5. When done, press F1 multiple times to exit the menu system.

See Chapter 5 for more information on the TEST menu. Also see **Measurement Definitions**, later in this chapter.

Printing Results (Reports)

A serial or parallel printer may be connected to the Analyzer's RS-232-C or PRINTER ports respectively. Note that you cannot connect a GPIB printer directly to the GPIB port; but you may "print" results to a GPIB controller, which can store reports for later viewing or printing.

Basic Report Setup Procedure

The following initial setup procedure must be performed in order to generate any type of Analyzer report.

1. Connect your printer to the Analyzer RS-232 or PRINTER ports as appropriate. (See Chapter 6 for details).
2. Press F1 to enter the menu system.
3. Select MORE (F1) to view the second page of the main menu.
4. Set up the appropriate hardware port as follows:
   a. If you are using a serial printer, select RS232 (F2) to set up the serial port.
   b. If you are "printing" to a GPIB controller, select GPIB (F3) to set up the GPIB port

☑ **NOTE**: The Analyzer PRINTER port is a standard PC-type parallel port which requires no hardware setup.

5. Next, select the PRINT parameter (F4).
   a. Set the PORT parameter to Parallel, GPIB, or Serial.
   b. Set the ON/OFF parameter to ON to enable reports.

☑ **NOTE**: The PRINT ON/OFF parameter must be set to ON to print any type of report.

6. When you have completed all desired setup changes, press F1 multiple times to exit the menu system.

Analyzer Setup Report

Press the F4 key at any time to print an immediate report listing the current setup of the Analyzer. This function is not available while the Analyzer is in the menu mode. An example Setup Report is shown in Figure 5-5.

Figure 5-5 Example Analyzer Setup Report

```
**** Tektronix, Inc. GB-700 Jun/14/92 02:14:29
AUTO_SET AUTO
DATA_DELAY 1.800E-9
DATA_THRES 0.05
RDATA_DELAY 0.000E-9
RDATA_THRES -1.50
DATA_TERM GND
CLOCK_TERM GND
RDATA_TERM GND
TEST_LENGTH "00:00:30"
TEST_MODE TIMED
TEST_PREV PRE
TEST_REP ON_ERR
TEST_STATE STOP
TEST_SQUELCH OFF
TEST_THRES OFF
WIN_MODE SEC
WIN_PREV CUR
WIN_REP OFF
WIN_BIT_LEN 09
WIN_SEC_LEN "00:00:01"
PRINT_ENABLE ON
PRINT_PORT PARALLEL
AUDIO_VOL 0
AUDIO_RATE 3
PRBS_LENGTH 23
WORD_BITS 16, #HAA, #H55
DATA_PATTERN WORD
DATA_INVERT ON
WORD_MEMORY 0, 16, #HAA, #H55
WORD_MEMORY 1, 16, #HAA, #H55
WORD_MEMORY 2, 16, #HAA, #H55
WORD_MEMORY 3, 16, #HAA, #H55
WORD_MEMORY 4, 16, #HAA, #H55
```

```
WORD_MEMORY 5, 16, #HAA, #H55
WORD_MEMORY 6, 16, #HAA, #H55
WORD_MEMORY 7, 16, #HAA, #H55
WORD_MEMORY 8, 16, #HAA, #H55
WORD_MEMORY 9, 16, #HAA, #H55
VIEW_ANGLE 0
GPIB_ADDRESS 14
GPIB_BUS  OFF_BUS
```

End-of-Test Reports

When End-of-Test reports are enabled, one End-of-Test report will be generated each time the end of a Test interval is reached. This can occur automatically, when timing mode is set to Timed or Repeat, or manually when the user stops an Untimed test by pressing the CLEAR key. Use the REPORT parameter in the TEST menu to enable or disable End-of-Test reports. An example End-of-Test report is shown in Figure 5-6.

Figure 5-6 Example End-of-Test Report

```
-----------------------------------------------------------------------------------------------
Tektronix, Inc.  GB-700  TEST SUMMARY        Jun/14/92   02:42:48

TEST MODE:       TIMED                       FREQ:    100.0 MHz          ERROR THRES:  E-05

          TIME                                ALARMS                                PERFORMANCE
START   Jun/14/92   02:43:26          SIG LOSS          OS   US    0  0.0%
STOP   Jun/14/92    0s:43:31          SYNC LOSS         OS   SES    0  0.0%
ELAPSED    000-00:00:05               PHASE ERR      OS TES   5   100.0%
                    ES    5    100.0%
          ERRORS/BITS       EFS    0    0.0%
TOTAL ERRS       000050000          AVG RATE         1.0E-04   DM    0   0.0%
TOTAL BITS       500002816          CUR RATE         1.0E-04
-----------------------------------------------------------------------------------------------
```

You can set up the Analyzer to generate End-of-Test Reports as follows:

Procedure to Enable or Disable End-of-Test Reports: :

1. Complete the basic report setup procedure.
2. Press F1 to enter the menu system.
3. Select the TEST menu (F2).
4. Select the REPORT parameter (F4).
5. You may now either **enable** End-of-Test reports by selecting END OF TEST or EOT/ERROR; or **disable** End-of-Test reports, by selecting NONE.
6. Press F4 to lock in you selection.
7. Press F1 multiple times until you have exited the menu system.

End-of-Window Reports

When enabled, an End-of-Window report will occur once every second. The results of an End-of-Window report are based on a sliding interval T, where T is set in terms of bits or time (hours:minutes:seconds). Use the REPORT parameter in the WINDOW menu to enable or disable End-of-Window reports. Use the MODE, BITS, and SECOND parameters in the WINDOW menu to set window length T. An example End-of-Window report is shown in Figure 5-7.

Figure 5-7 Example End-of-Window Reports

```
Date:    Jun/14/92          Time:    02:42:34.46

  Bits= 5.00E+08                Errs= 5000          Err rate= 1.0E-04          Freq= 100.00 MHz

  Pattern= AA55       Data los= 0          Sync Los= 0                Phase Err= 0
```

Procedure to Enable or Disable End-of-Window Reports:

1. Complete the Basic Report Setup Procedure.
2. Press F1 to enter the menu system.
3. Select the WINDOW menu (F3).
4. Press F1 to see the second page of the WINDOW menu.
5. Select the REPORT parameter (F2).
6. Set the REPORT parameter to ON. Press F4 to lock in this choice.
7. Exit the menu system by pressing F1 multiple times until the normal display format appears.

On-Error Reports

When enabled, On-Error reports are generated for each second in which error rate is above the current THRES threshold. Note that On-Error reports can be squelched after reports are generated on 10 consecutive seconds, by enabling the SQUEL feature. This is recommended for unattended operation since On-Error reports can generate a lot of paper. An example On-Error report is shown in Figure 5-8.

Figure 5-8 Example On-Error Reports

```
-------------------------------------------------------------------------------------------------------------------------

Tektronix, Inc.      GB-700 TEST START      Jun/14/92  02:42:48


TIME:  02:42:48            ERRORS:  10000          RATE:   1.00e-004
TIME:  02:42:49            ERRORS:  10000          RATE:   1.00e-004          SynLos
TIME:  02:42:50     ERRORS:  10000              RATE:   1.00e-004

-------------------------------------------------------------------------------------------------------------------------
```

Procedure to Enable On-Error Reports:

1. Complete the basic report setup procedure.
2. Press F1 to enter the menu system.
3. Select the TEST menu (F2).
4. Select the REPORT parameter (F4).
5. You may now either enable or disable End-of-Window reports by setting the WINDOW REPORT parameter to ON or OFF.
6. Press F4 to lock in your selection.
7. `Press F1 multiple times to exit the menu system.

On-Demand Test Reports

You can generate a test summary report on demand using the PRINT function in the TEST menu. While a test is in progress, the PRINT function will generate a summary report based results from the current test interval. This report will have the same basic format as an End-of-Test report. If a test is not in progress, the PRINT function will generate an End-of-Test Report based on previous results, that is results from the most recently completed test interval.

Procedure to Generate an On-Demand Test Summary Report:

1. Make sure the Basic Report Setup Procedure has been completed.
2. Press F1 to enter the menu system.
3. Select the TEST menu (F2).
4. Press F1 to see the second page of the TEST menu.
5. Select the PRINT parameter to generate an immediate Test report
6. Press F1 multiple times to exit the menu system.

Result Definitions

The following section defines all results calculated by the Analyzer.

BER and Bit Errors

The following two results are calculated by all three Analyzer measurement processes (Totalize, Window, and Test):

- **Bit Errors**: The total number of bit (logic) errors counted in the measurement interval. May be based on Totalize, Window, or Test measurement intervals.
- **Bit Error Rate (BER)**: Also known as "bit error ratio". May be based on Totalize, Window, or Test measurement intervals. Equals the number of bit errors divided by the total number of bits in the measurement interval:

  BER = TE / TB

  where: TE = total number of bit errors in the interval

  TB = total number of bits in the interval

Note that BER results, when included in End-of-Test or Immediate Test Reports, are identified as follows:

- **AVE RATE**: BER calculated over the entire TEST interval.
- **CUR RATE**: BER calculated over the latest WINDOW interval.

All Other Results (Test Intervals Only)

The following results are calculated over Test intervals only. You can view all Test results using the VIEW-CUR and VIEW-PRE functions in the TEST menu. Or, you can print all Test results at the end of Test intervals or immediately, using the REPORT or PRINT functions respectively in the TEST menu.

- **SIG LOSS**: The number of 20 ms intervals in which the Analyzer input activity detector sees no transitions on the input CLOCK signal for 20 ms.
- **SYNC LOSS**: The number of 20 ms intervals in which pattern synchronization (lock) is lost.
- **PHASE ERR**: The number of 20 ms intervals in which a phase error event is detected. The Analyzer will report a phase error when the active clock edge moves too close to the data waveform transition point, thus violating the input circuit setup or hold time.

- **Errored Seconds (ES)**: The number of seconds in the measurement interval containing one or more errors. The *gigaBERT700* measures a*synchronous* errored seconds—that is one second intervals based on the instrument's internal clock rather than the detection of an error. Errored seconds are not counted during unavailable time (see below). However, the errored second count does include both severely errored seconds and non-severely errored seconds.

  ES = TSE - US

  where: TSE = total seconds in the current measurement interval with one or more errors.
  US = unavailable seconds in the current interval

- **% Errored Seconds (%ES)**: Errored seconds as a percentage of the total number of seconds in the measurement interval:

  %ES = (ES / TS) * 100%

  where: ES = errored seconds in the measurement interval
  TS = total seconds in the measurement interval

- **EFS**: The number of seconds that contain no errors and are not unavailable.

  EFS = (TS - ES - US)

  where: TS = total seconds in the measurement interval
  ES = errored seconds in the measurement interval
  US = unavailable seconds in the measurement interval

- %**EFS**: Percentage Error-free Seconds. Error-free seconds as a percentage of the total number of seconds in the measurement interval.

  % EFS = (EFS / TS) * 100%

  where: EFS = error-free seconds in the measurement interval
  TS = total seconds in the measurement interval

- **Severely Errored Seconds**: The number of errored seconds in the measurement interval which BER is greater than or equal to 1E-03, excluding unavailable seconds. For example, on a 100 Mb/s test signal, this would include all available, synchronous errored seconds with 100,000 or more errors.

  SES = (seconds with BER ≥ 1E-03) - US

where: US = unavailable seconds in the current interval

- **TES**: Threshold Errored Seconds: The number of seconds in the measurement interval in which BER exceeds the threshold set by the THRES parameter in the TEST menu, minus the number of unavailable seconds. Available threshold values are 1E-n, where n = 2, 3, ... 16.

  TES = (seconds with BER ≥ Threshold) - US

  where: US = unavailable seconds in the current interval

- **Degraded Minutes**: The number of 60 second intervals in the current interval in which the BER exceeds the current test threshold (THRES).

- **Percentage Degraded Minutes (%DM)**: The number of degraded minutes expressed as a percentage of the total number of minutes in the measurement interval.

  % DM = (DM / TM) * 100%

  where: DM = degraded minutes in the measurement interval

  TM = total minutes in the measurement interval

- **Unavailable Seconds (US)**: The number of seconds in unavailable intervals. Unavailable intervals start upon the detection of 10 contiguous severely errored seconds (SES), and end upon the detection of 10 non-severely errored seconds.

- **Percentage Unavailable Seconds (%US)**: The number of unavailable seconds expressed as a percentage of total seconds in the measurement interval.

  % US = (US / TS) * 100%

  where: US = unavailable seconds in the measurement interval

  TS = total seconds in the measurement interval

Error History Indicators

The Analyzer (performance) history indicators are located in the ERROR HISTORY section of the front panel. These indicators will latch on when the indicated event occurs, and can be cleared by the user.

Indicator Definitions

- **SYNC LOSS**: This indicator will turn on if the LOCK LED turns off; that is if the BER rises above the current synchronization threshold (See Synchronization (LOCK) Threshold in Chapter 4)
- **BIT**: Will turn on if a bit error is detected.
- **PHASE**: Will turn on if a phase error is detected. The Analyzer will report a phase error when the active clock edge moves too close to the data waveform transition point thus violating the input circuit setup or hold time.
- **POWER**: Will turn on after a power loss has occurred.

CLEAR Control

Pressing the CLEAR key will reset all active history indicators. Note that when you start a test, you must clear test results and history indicators by pressing the ERROR DETECTION CLEAR and ERROR HISTORY CLEAR keys respectively.

Audio (Beeper) Function

The Analyzer may be set up to "beep" each time a second is detected in which BER is above a specified threshold. The AUDIO VOL and RATE controls are used to configure this function.

Procedure To Set Up the Audio Alert Function:

1. Press the AUDIO RATE up or down keys to increment or decrement the current audio alert BER threshold. The current value of the AUDIO RATE will be displayed in the bottom, right field of the display for about seven seconds after the last key press. Available selections are

   1E-x, where x = 2, 3, ... 16

2. Press the AUDIO VOL up or down keys to increment or decrement the current audio alert volume. There are four volume levels. The minimum value is "OFF". Except when volume is set to the minimum level, a beep will occur each time you press an AUDIO VOL up or down key to indicate the current volume.

Analyzer Error Messages

When abnormal input conditions are detected, the Analyzer will display various error messages to indicate an unusual condition. These are explained below.

- **NO CLOCK:** This message will appear in the frequency field (top, left) if no activity is detected at the CLOCK input for 20 ms.
- **NO DATA:** This message will appear in the BER field (top, middle) if no activity is detected at the data (or clock) input for 20 ms.
- **LOW AMP**: May appear when no signal or a low-signal is applied to the CLOCK or DATA input and AUTO_SEARCH is enabled

Starting and Stopping Measurements

The following section explains how to start and stop TEST measurements, and how to initialize or "re-start" WINDOW and TOTALIZE measurements.

Starting and Stopping TEST Measurements

The TEST measurement process has two states: started and stopped . In the started or active state, new "current" results are accumulated while all results from the previous TEST interval are saved in memory. In the stopped state, all current results are frozen so that in effect the results from the last two TEST intervals are saved in memory.

You can tell whether the current TEST process is started or stopped by observing the TEST character (T, U, or R) in the display. If the displayed TEST character (in front of the BER result) is blinking, then the TEST process is stopped and current results are frozen. On the other hand, if the TEST character is not blinking, that is if it is on steady, then the current TEST process is started and new results are accumulating.

You can start and stop TEST measurements as follows:

Procedure for Starting the TEST Measurement Process:

1. Configure your Analyzer and Generator as desired. In particular, select a TEST timing mode: Timed, Untimed, or Repeat.
2. Use the DISPLAY SELECT key to set the display mode to TEST. Verify that the expected TEST character (T, U, or R) is shown.
3 If the TEST character is blinking, press the ERROR DETECTION CLEAR key to stop the TEST process.
4. At this point you may press the ERROR DETECTION CLEAR key to start a new TEST process at any time. After pressing CLEAR, verify that the displayed TEST character is no longer blinking. After starting a new TEST interval you may also reset the bit, phase, and power history indicators by pressing the ERROR HISTORY CLEAR key.

Regardless of the current TEST timing mode, you can stop an active TEST process as follows:

Procedure for Stopping the TEST Process:

1. Use the DISPLAY SELECT key to set the display mode to TEST. Verify that the expected TEST character (T, U, or R) is shown.
2 Observe the TEST character.

a. If the character is on steady, then you may stop the current TEST interval by pressing the ERROR DETECTION CLEAR key.

b. However, if the character is blinking then the TEST process is already stopped and you should not press the CLEAR key until you want to start a new TEST interval.

Note that TEST measurement starting and stopping can be controlled manually or automatically, depending on the selected timing mode. When the Untimed mode is selected, TEST intervals must be started and stopped manually by the user. When the Timed mode is selected, TEST intervals are started manually, but stopped automatically after an interval determined by the LENGTH parameter in the TEST menu. When the Repeat timing mode is selected, once the TEST process has been started by the user, new TEST intervals are stopped and then re-started automatically, at intervals determined by the LENGTH parameter. However, even when the Repeat mode is selected, the overall TEST process can controlled by the user, that is started and stopped manually.

Starting New Totalize and Window Measurement Intervals

Unlike the TEST process, the Totalize and Window measurement processes are continuous background processes that cannot be stopped and started by the user. However you can clear all current results to start a new measurement interval as follows:

Procedure for Starting a New Totalize or Window Measurement Interval:

1. Configure your Analyzer and Generator as desired.
2. Select the desired display mode (Totalize or Window).
3. At this point you may press the ERROR DETECTION CLEAR key at any time to zero all current results and start a new measurement interval. After starting a new TOTALIZE or WINDOW interval you may also reset the bit, phase, and power history indicators by pressing the ERROR HISTORY CLEAR key.

Menus

This chapter explains how to use the *gigaBERT700* menu system. It includes basic rules, an overview of the Generator and Analyzer menu structures, and a description of each menu function.

Menu Basics

The following section introduces basic menu concepts.

Functions Performed Using the Menu System

The *gigaBERT700* menu system is used to perform two types of functions: setup and immediate. Menu *setup* functions are used to set up instrument parameters such as test mode (untimed, timed, or repeat), of test duration, and window length. Setup functions are also used to configure remote ports and to enable or disable reports. Menu *immediate* functions are used to view or print results based on the "test in progress" or the last completed test. Immediate functions are also used to view the instrument's software version or a list of installed options.

Note that a few menu functions can also be performed using front panel keys—for example setting word length. However most menu functions do not have front panel equivalents.

Menu and Function "Pages"

Once you press the F1 key to enter the menu system you will see two basic display or "page" formats: menus and functions. *Menu* pages are used to pick a function or another menu by pressing one of the function keys (F1 ... F4). *Function* pages are used to change one or more setup parameters (setup functions) or to perform specific actions (immediate functions).

An example setup procedure is presented next to illustrate the use of menus and functions. The objectives of this example procedure will be to:

- ❑ Set TEST length to 30 minutes.
- ❑ Set TEST mode to TIMED.
- ❑ Enable On-Error and End-of-Test reports.

Example Procedure Illustrating Menus and Functions:

1. Press F1 to enter the Analyzer menu system. At this point you will see the first page of the Analyzer top level menu:

2. Press F2 to enter the TEST menu. You will now see the second page of the main menu:

```
 F1      F2     F3      F4
MORE   LENGTH  MODE  REPORT
```

3. Press F2 and you will see the LENGTH function:

```
F1:ESC F2<- ->F3 F4:SET
TEST LENGTH = 01:00:00
```

NOTE: Your display may show a different value.

4. The TEST LENGTH function allows you to set the length of timed tests in terms of hours, minutes, and seconds. Notice that either the hours, minutes, or seconds field will be flashing. To change the value of the flashing field, press the pattern up/down keys. To change the value of another field, use the F2 or F3 key to select this field and then use the pattern up/down keys to change its value.

   In this example, we will change TEST LENGTH from 1 hour (as shown above) to 30 minutes, as shown below:

```
F1:ESC F2<- ->F3 F4:SET
TEST LENGTH = 00:30:00
```

5. Note that there are two ways to exit a function like TEST LENGTH. The normal way is to press F4 to lock in your changes and exit the function. However you can also exit most functions without making any setup change by pressing F1 to "escape". In this example we'll press F4 and see the following:

```
 F1      F2     F3      F4
MORE   LENGTH  MODE  REPORT
```

6. Notice that we've returned to the TEST menu. Next press F3 to enter the MODE function and see the following:

```
F1:ESC            F4:SET
TEST MODE = UNTIMED
```

7. Note that the MODE function has only one field and therefore does not use the F2 and F3 direction keys. Press the pattern up key one time to select the timed test mode and see the following:

```
F1:ESC              F4:SET
TEST MODE = TIMED
```

8. As before, to lock in this setup change and return to the TEST menu, press the F4 key and see:

```
  F1      F2     F3      F4
MORE   LENGTH   MODE REPORT
```

9. The last function we'll perform in this example is to enable End-of-Test and On-Error reports. To do this select the REPORT function by pressing F4 and see:

```
F1:ESC              F4:SET
REPORTS ON = NONE
```

10. Now press the pattern up key three times to select EOT/ERROR which will enable both End-of-Test and On-Error reports. The REPORT function should now look like the following:

```
F1:ESC              F4:SET
REPORTS ON = EOT/ERROR
```

11. To lock in this change and return to the TEST menu, press F4:

```
 F1      F2     F3      F4
MORE   LENGTH   MODE REPORT
```

12. Since all of the setup goals have been accomplished, we now want to exit the Analyzer menu system. To do this from the TEST menu, or from any menu, *simply keep pressing the F1 key until the normal display appears*. In this example you would see the following:
    a. Press F1 and see the second page of the TEST menu .
    b. Press F1 a second time and see the third page of the TEST menu.
    c. Press F1 a third time and see the first page of the main menu again.

d. Press F1 a fourth time to see the second page of the main menu.

e. Press F1 a fifth time and see the third page of the main menu.

f. Press F1 a sixth time to exit the menu system and see the normal Analyzer display format.

At this point you could perform a 30 minute timed test by:

1. Selecting the TEST display mode (press DISPLAY SELECT until a "T" appears in front of the BER field) and
2. Pressing the ERROR DETECTION CLEAR key to start a timed test interval.

General Rules for Using the Menu System

Operation of the *gigaBERT700* Analyzer and Generator menu systems can be summed up by the following rules:

1. From the normal display mode, press F1 to enter the menu system.
2. Navigate to a particular menu function by pressing the appropriate "F" keys to select lower level menus and finally the desired function.
3. In multi-field functions, use the F2 (move left) or F3 (move right) keys to select a field. Note that the selected field is indicated by its flashing mode: flashing = selected, not flashing = not selected.
4. Once a field is selected, use the pattern up/down keys to increment or decrement the value of the selected field.
5. To exit any setup function, press F4 to lock in all setup changes or F1 to "escape" without making any setup changes.
6. From any menu, you can always exit the menu system by pressing F1 key one or more times until the normal display format appears.

Menu Summaries

The *gigaBERT700* Generator and Analyzer menu system may be thought of as a top level or "main" menu plus a series of sub-menus, with each sub-menu containing a group of related functions. In this section you will find:

1. A brief description of each menu found in the *gigaBERT700* menu system (Table 6-1).
2. An overall view of the Analyzer menu system (Table 6-2).
3. An overall view of the Generator menu system (Table 6-3).

Note that all menu names in Tables 6-2 and 6-3 are shown in bold type, and that all functions included only in instruments equipped with the 128K Option are marked with an asterisk (*). Once you have reviewed the summary tables in this section, please refer to the next section (**Menu Functions**) for a detailed description of each *gigaBERT700* menu function.

Table 6-1 Menu Descriptions

Menu	Found In Which Instrument	Description
"Main"	Analyzer and Generator	Provides access to all other menus. Also contains a few functions not part of any other menu.
TEST	Analyzer only	Contains functions to set up the TEST measurement process including timing mode, End-of-Test reports, and the test threshold.
WINDOW	Analyzer only	Contains functions to set up the WINDOW measurement process including window length and End-of-Window reports.
WORD	Analyzer and Generator	Contains functions to create and edit word patterns.
RS-232	Analyzer and Generator	Contains functions to set up the RS-232C (serial) port.
PRINT	Analyzer only	Contains functions to select which port is used to print reports and to enable or disable all report printing.
UTIL	Analyzer and Generator	Contains functions to show which options are installed, and the current software version.

Table 6-2 Analyzer Menu System Overview

Menu	Page	F1	F2	F3	F4
"Main"	**1**	MORE	**TEST**	**WINDOW**	**WORD**
	2	MORE	**RS232**	GPIB	**PRINT**
	3	EXIT (*to Normal mode*)	DATE	TIME	**UTIL**
TEST	**1**	MORE	LENGTH	MODE	REPORT
	2	MORE	THRES	SQUEL	PRINT
	3	ESC (*to MAIN Menu*)	VIEW-CUR	--	VIEW-PRE
WINDOW	**1**	MORE	MODE	BITS	SECOND
	2	ESC (*to MAIN Menu*)	REPORT	--	--
WORD	**1**	MORE*	EDIT*	LENGTH*	FILL*
	2	ESC (*to MAIN Menu*)	SYNC*	ORDER[3]	PSYNC*
RS232	**1**	MORE	BAUD	PARITY	SIZE
	2	ESC (*to MAIN Menu*)	EOL	XON/XOFF	ECHO
PRINT	**1**	ESC (*to MAIN Menu*)	PORT	ON/OFF	--
UTIL	**1**	ESC (*to MAIN Menu*)	OPTION	VER	--

NOTES:

1. Menu names appear in bold typeface.
2. Functions included only in instruments equipped with the 128K Option are marked with an asterisk (*).
3. The ORDER function appears under the F2 key in units **not** equipped with the 128K Option.

Table 6-3 Generator Menu System Overview

Menu	Page	F1	F2	F3	F4
MAIN	**1**	MORE	**RS232**	GPIB	**WORD**
	2	EXIT (*to Normal mode*)		CLOCK	**UTIL**
RS232	**1**	MORE	BAUD	PARITY	SIZE
	2	ESC (*to MAIN Menu*)	EOL	XON/XOFF	ECHO
WORD	**1**	MORE*	EDIT*	LENGTH*	FILL*
	2	ESC (*to MAIN Menu*)	ORDER[3]	PSYNC*	--
UTIL	**1**	ESC (*to MAIN Menu*)	OPTION	VER	--

NOTES:

1. Menu names appear in bold typeface.
2. Functions included only in instruments equipped with the 128K Option are marked with an asterisk (*).
3. The ORDER function appears under the F2 key in units **not** equipped with the 128K Option.

Menu Function Definitions

This section describes each menu function included in the *gigaBERT700* menu system. For each function you will find the following information:

1. Its basic display format.
2. The menu in which it is located.
3. The function name used in the menu system.
4. Whether it is found in the Analyzer, Generator, or both.
5. Which option(s) must be installed for this function to be available.
6. What this function is used for.
7. Parameters set using this function and their ranges.
8. Notes.

Note that most of the following function descriptions are identified by a menu name and a function name, for example Test Length. This is to clarify the application of the described function, and to differentiate functions that have the same name, for example Word Mode and Window Mode. Also note that function descriptions are grouped by menu.

Word Edit (EDIT)

Format:

```
F1:ESC F2<- ->F3 F4:SET
WORD AT ddddd = bbbbbbbb
```

Menu: WORD

Function Name: EDIT

Instruments: Analyzer and Generator

Options: Requires the 128K Option.

Application: Use this function to create new word patterns or edit the current word pattern.

Parameters: Byte Location (ddddd): Set this parameter to the location (in decimal) of the byte you want to edit in the current word. May be set in the range: 00001 to M+1, where M the number of whole bytes in the current word. If word length is M bytes plus N bits, then the "byte" location of the last N bits is M+1.

Byte Value (bbbbbbbb): This is the binary representation of the selected byte. Edit this byte using the front panel "bit" keys, MSB 1 ... LSB 8.

Range: 00000000 to 11111111 (binary)

Notes: Use the WORD LENGTH function to set word length.

Word Length (LENGTH)

Format:

```
F1:ESC F2<- ->F3 F4:SET
LEN:mmmmm BYTES + n BITS
```

Menu: WORD

Function Name: LENGTH

Instruments: Analyzer and Generator

Options: Requires the 128K Option.

Application: Use this function to set the length of the current word pattern.

Parameters:

Bytes (mmmmm): Set this parameter to the number of whole bytes in the pattern length. That is, if length is M bytes + N bits, set this parameter to M.

Range: 0 to 16,384

Bits(n): Set this parameter to the number of extra bits in the pattern length. That is, if length is M bytes + N bits, set this parameter to N.

Range: 0 to 7.

Word Fill (FILL)

Format:

```
F1:ESC                    F4:SET
FILL WORD MEMORY WITH:hh
```

Menu: WORD

Function Name: FILL

Instruments: Analyzer and Generator

Options: Requires the 128K Option.

Application: Use this function to fill all bytes in the current word with the same 8-bit pattern.

Parameters: Fill Byte (hh): Enter the hex value for the fill byte
Range: 00 to FF.

Notes: You may use the fill function as the basis for a new word pattern, then edit individual bytes using the WORD EDIT function to create the exact pattern that you need.

Word Order (ORDER)

Format:

```
F1:ESC                    F4:SET
WORD ORDER = ccc FIRST
```

Menu: WORD

Function Name: ORDER

Instruments: Analyzer and Generator

Options: Requires the 128K Option.

Application: Use this function to change the transmit or analysis bit order (MSB first or LSB first) of the current word pattern.

Parameters: Word Order (ccc): May be set to LSB or MSB.

Note: Word order also applies to the fractional end-byte in patterns that do not contain an exact multiple of eight bits.

Word Sync. Pulse (PSYNC)

Format:

```
F1:ESC                    F4:SET
PAT SYNC AT BYTE:  ddddd
```

Menu: WORD

Function Name: PSYNC

Instruments: Analyzer and Generator

Options: Requires the 128K Option.

Application: Use this function to set the byte location of the pattern synchronization pulse in long-word patterns.

Parameters: Pattern Sync. Pulse Byte Location (ddddd): Set this parameter to the number (in decimal) of the byte in which you want the pattern sync. pulse to occur.

Notes:

1. The PSYNC output is in the OUTPUT section of the Generator, and the MONITOR section of the Analyzer.

2. The PSYNC parameter does not affect the location of the PSYNC pulse for PRBS or short word patterns.

Word Synchronization Threshold (SYNC)

Format:

```
F1:ESC                    F4:SET
WORD SYNC THRES LEVEL= d
```

Menu: WORD

Function Name: SYNC

Instruments: Analyzer only

Options: Requires the 128K Option.

Application: This function is used to set the BER synchronization threshold used by the Analyzer for long word patterns. This function does not affect the sync. thresholds for PRBS or short word patterns, which are fixed.

Parameters: Long Word Synchronization Threshold Level (d): Set this parameter to a level from 1 to 9.

Notes: The long word synchronization threshold is always set to 256 errors in a rolling window of variable length. The length of this window is automatically set by the Analyzer, based on the selected threshold level, so that the nine threshold levels effectively correspond to the following bit error rates:

Level	BER
1	3.1 E-02
2	7.8 E-03
3	1.9 E-04
4	9.7E-04
5	4.8 E-04
6	2.4 E-04
7	1.2 E-04
8	6.1 E-05
9	3.0 E-05

Test Length (LENGTH)

Format:

```
F1:ESC F2<-  ->F3 F4:SET
TEST LENGTH = hh:mm:ss
```

Menu: TEST

Function Name: LENGTH

Instruments: Analyzer only

Options: None required. This is a standard feature.

Application: Use this function to set the duration of timed tests and the repeat interval of repeat timed tests.

Parameters:
Hours (hh): Set from 00 to 23.
Minutes (mm): Set from 00 to 59.
Seconds (ss): Set from 00 to 59.

Notes: Test length does not affect untimed TEST intervals, or the TOTALIZE or WINDOW measurement processes.

Test Mode (MODE)

Format:

```
F1:ESC                    F4:SET
TEST MODE = ccccccc
```

Menu: TEST

Function Name: MODE

Instruments: Analyzer only

Options: None required. This is a standard feature.

Application: Use this function to select a test timing mode.

Parameters: Test Timing Mode (ccccccc): May be set to TIMED, REPEAT, or UNTIMED

Notes: This function applies only to the TEST measurement process and has no impact on either the TOTALIZE or WINDOW measurement processes.

Test Reports (REPORT)

Format:

```
F1:ESC                    F4:SET
REPORTS ON = ccccccccc
```

Menu: TEST

Function Name: REPORT

Instruments: Analyzer only

Options: None required. This is a standard feature.

Application: Use this function to enable or disable End-of-Test and On-Error reports.

Parameters: Reports On (ccccccccc): May be set to:
NONE: All test reports are disabled.
END OF TEST: Only EOT reports enabled.
ON ERROR: Only On Error reports enabled.
EOT/ERROR: Both EOT and On Error reports enabled.

Notes: If you want to generate reports, be sure the ON/OFF function in the PRINT menu is set to ON.

Test Threshold (THRES)

Format:

```
F1:ESC                F4:SET
ERROR THRESHOLD = eeeee
```

Menu: TEST

Function Name: THRES

Instruments: Analyzer only

Options: None required. This is a standard feature.

Application: Use this function to set the value of the test threshold.

Parameters: Test Threshold (eeeee): Set from 1E-03 to 1E-16.

Notes: The test threshold affects On-Error reports and the TES (threshold errored second) result.

Test Squelch (SQUEL)

Format:

```
F1:ESC                    F4:SET
ON ERROR SQUELCH  = ccc
```

Menu: TEST

Function Name: SQUEL

Instruments: Analyzer only

Options: None required. This is a standard feature.

Application: Use this function to enable or disable squelching of On-Error reports.

Parameters: On Error Squelch (ccc): Set to ON or OFF

Notes: When On Error Squelch is ON, the analyzer will squelch (temporarily stop printing) On Error reports after ten consecutive reports, that is ten consecutive seconds in which BER exceeds the current test threshold. On Error reports will resume after 10 consecutive seconds in which the BER does not exceed the test threshold.

Test Print (PRINT)

Format:

```
F1:ESC                F4:SET
F4 TO PRINT TEST RESULTS
```

Menu: TEST

Function Name: PRINT

Instruments: Analyzer only

Options: None required. This is a standard feature.

Application: Use this function to print a test summary report based on current test results (if a test is in progress) or previous test results (if a test is not in progress).

Parameters: None. This is an immediate function. Simply press F4 to generate a report or F1 to escape the function without generating a report.

Notes: Make sure the ON/OFF function in the PRINT menu is ON if you want to generate a test summary report.

Test View Previous (VIEW-PRE)

Format:

```
F1:ESC                    F4:SET
(result name)(count) (%)
```

Menu: TEST

Function Name: VIEW-PRE

Instruments: Analyzer only

Options: None required. This is a standard feature.

Application: Use this function to view results from the last completed test.

Parameters: This is an immediate function. After selecting VIEW-PRE use the pattern up/down keys to scroll through the results shown below.

START (test start time), STOP (test stop time), ELAPSED (duration of test), TTL BIT (total number of bits in interval), TTL ERR (total number of bit errors counted), AVE ERROR RATE (BER of TEST interval), CUR ERROR RATE (BER of WINDOW interval), US (Unavailable Seconds), SES (Severely Errored Seconds), TES (Threshold Errored Seconds), ES (Errored Seconds), EFS (Error Free Seconds), DM (Degraded Minutes), SIG LOSS SEC (seconds in which a loss of signal has occurred), SYNC LOSS SEC (seconds in which a loss of pattern synchronization has occurred), PHASE ERR SEC (seconds in which a phase error has occurred).

Test View Current (VIEW-CUR)

Format:

```
F1:ESC                    F4:SET
(result name)(count) (%)
```

Menu: TEST

Function Name: VIEW-CUR

Instruments: Analyzer only

Options: None required. This is a standard feature.

Application: Use this function to view current test results. In effect this function takes a snap shot of the latest results from a test in progress.

Parameters: None. This is an immediate function. Use pattern up/down keys to scroll through results. Available results are the same as for VIEW-PRE except that STOP time is replaced by the message TEST IN PROGRESS

Notes: If the TEST process is currently stopped, this function will display the error message: NO TEST IN PROGRESS.

Window Mode (MODE)

Format:

```
F1:ESC                    F4:SET
WINDOW MODE = ccccccc
```

Menu: WINDOW

Function Name: MODE

Instruments: Analyzer only

Options: None required. This is a standard feature.

Application: Use this function to set window length equal to the number of bits specified by the WINDOW BITS function, or the time specified by the WINDOW SECOND function.

Parameters: Window Mode (ccccccc): May be set to BITS or SECONDS.

Window Interval in Bits (BITS)

Format:

```
F1:ESC                F4:SET
WINDOW LEN = 1.0eEE BITS
```

Menu:	WINDOW
Function Name:	BITS
Instruments:	Analyzer only
Options:	None required. This is a standard feature.
Application:	When WINDOW MODE is set to BITS, use this function to set window duration in terms of bits.
Parameters:	Window Length (EE): May be set from 1.0e08 to 1.0e16

Window Interval in Hrs:Min:Sec (SECOND)

Format:

```
F1:ESC F2<-  ->F3 F4:SET
WINDOW LEN = hh:mm:ss
```

Menu: WINDOW

Function Name: SECOND

Instruments: Analyzer only

Options: None required. This is a standard feature.

Application: When WINDOW MODE is set to SECONDS, use this function to set window duration in terms of hours, minutes, and seconds.

Parameters: Window Length (hh:mm:ss):
hh: Set from 00 to 23
mm: Set from 00 to 59
ss: Set from 00 to 59

Window Reports (REPORT)

Format:

```
F1:ESC                    F4:SET
END OF WINDOW PRINT = ccc
```

Menu: WINDOW

Function Name: REPORT

Instruments: Analyzer only

Options: None required. This is a standard feature.

Application: Use this function to enable or disable End-of-Window reports.

Parameters: End-of-Window Print (ccc): May be set to ON or OFF.

Notes: To print End-of-Window reports, be sure ON/OFF parameter in PRINT menu is set to ON.

RS-232 Baud Rate (BAUD)

Format:

```
F1:ESC                    F4:SET
BAUD = dddd
```

Menu: RS232

Function Name: BAUD

Instruments: Analyzer and Generator

Options: None required. This is a standard feature.

Application: Use this function to set the baud rate of the serial (RS-232C) port.

Parameters: Baud rate (dddd): May be set to 300, 600, 1200, 2400, 4800, or 9600.

RS-232 Parity (PARITY)

Format:

```
F1:ESC                    F4:SET
PARITY = cccc
```

Menu: RS-232

Function Name: PARITY

Instruments: Analyzer and Generator

Options: None required. This is a standard feature.

Application: Use this function to set parity for the serial port.

Parameters: Parity (cccc): May be set to ODD, EVEN, or NONE

RS-232 Data Bits (SIZE)

Format:

```
F1:ESC                    F4:SET
SIZE =   d
```

Menu: RS232

Function Name: SIZE

Instruments: Analyzer and Generator

Options: None required. This is a standard feature.

Application: Use this function to set the number of data bits per character for the RS-232 (serial) port.

Parameters: Number of Data Bits (d): May be set to 7 or 8.

RS-232 End-of-Line Char. (EOL)

Format:

```
F1:ESC                    F4:SET
EOL = ccccc
```

Menu: RS232

Function Name: EOL

Instruments: Analyzer and Generator

Options: None required. This is a standard feature.

Application: Use this function to select an end-of-line terminator. This character or pair of characters will be added to the end of every line in reports sent to the RS-232 port.

Parameters: End-of-Line Terminator (ccccc): May be set to CR/LF, LF/CR, CR, or LF.

RS-232 Xon/Xoff (XON/XOFF)

Format:

```
F1:ESC                    F4:SET
XON/XOFF ENABLE = ccc
```

Menu: RS-232

Function Name: XON/XOFF

Instruments: Analyzer and Generator

Options: None required. This is a standard feature.

Application: Use this function to enable or disable Xon/Xoff flow control.

Parameters: Xon/Xoff Flow Control (ccc): May be set to ON (enabled) or OFF (disabled).

RS-232 Echo (ECHO)

Format:

```
F1:ESC                  F4:SET
RS232 ECHO ENABLE = ccc
```

Menu: RS232

Function Name: ECHO

Instruments: Analyzer and Generator

Options: None required. This is a standard feature.

Application: Use this function to enable or disable character echo on the RS-232 port. When enabled, the instrument will "echo" (that is, transmit back to the controller) each character that it receives on the RS-232 port.

Parameters: RS-232 Echo Enable (ccc): May be set to ON or OFF.

GPIB

Format:

```
F1:ESC                    F4:SET
TERMINATOR = cccccc
```

Menu: Selected from "main" menu.

Function Name: GPIB

Instruments: Analyzer and Generator

Options: None required. This is a standard feature.

Application: Use to select the GPIB end-of-line termination character or characters.

Parameters: GPIB End-of-Line Terminator (cccccc): May be set to EOI or EOI/LF.

External Clock Term. (CLOCK)

Format:

```
F1:ESC                    F4:SET
EXT CLOCK TERM: ccc
```

Menu: Selected from the Generator main menu.

Function Name: CLOCK

Instruments: Generator only

Options: None required. This is a standard feature.

Application: Use this function to select a termination for the Generator external clock (INPUT) input.

Parameters: External Clock Termination (ccc): May be set to GND or -2V

Utility Option (OPTION)

Format:	**F1 : ESC** **(options listed here)**
Menu:	UTIL
Function Name:	OPTION
Instruments:	Analyzer and Generator
Options:	None required. This is a standard feature.
Application:	Use this function to see which options are installed in your Analyzer or Generator.
Parameters:	None. This is an immediate function.

Utility Version (VER)

Format:	**F1 : ESC** **(software version listed here)**
Menu:	UTIL
Function Name:	VER
Instruments:	Analyzer and Generator
Options:	None required. This is a standard feature.
Application:	Use this function to see the software version installed in your unit.
Parameters:	None. This is an immediate function.

Date (DATE)

Format:

```
F1:ESC F2<-  ->F3 F4:SET
DATE = mmm dd yy
```

Menu: Selected from main menu.

Function Name: DATE

Instruments: Analyzer only

Options: None required. This is a standard feature.

Application: Use to set the Analyzer's internal date function.

Parameters: Month (mmm): Set in range JAN, FEB, ..., DEC
Day (dd): Set in range 01, 02, ..., 31
Year (yy): Set in range 93, ..., 99

Notes: End-of-Test reports are date and time stamped.

Time (TIME)

Format:

```
F1:ESC F2<-  ->F3 F4:SET
TIME = hh:mm:ss
```

Menu: Selected from main menu.

Function Name: TIME

Instruments: Analyzer only

Options: None required. This is a standard feature.

Application: Use this function to set the instrument's 24-hour internal clock.

Parameters: Hours (hh): Set in range 00 - 23
Minutes (mm): Set in range 00 - 59
Seconds (ss): Set in range 00 - 59

Notes: The Analyzer clock uses a 24-hour format.

Using Printers and External Controllers

This chapter explains how to use a printer with the *gigaBERT700* Analyzer, and how to remotely control the Generator and Analyzer via their RS-232C or GPIB ports. This chapter also includes setup procedures for the RS-232C and GPIB ports.

Remote Control Basics

Operation of a *gigaBERT700* Generator or Analyzer can be automated by connecting an external controller, such as a PC or "engineering workstation", to its GPIB or RS-232C port. With the exception of turning power on and off, all Generator and Analyzer setup functions can be performed by remote control. In addition, all Analyzer results can be retrieved by remote control.

You can also use the RS-232C port to operate a *gigaBERT700* Generator or Analyzer manually from either a terminal or a PC running a terminal emulation program. Terminal control of the *gigaBERT700* can be helpful when first learning the instrument's remote command language syntax or when debugging a control program.

It should be noted that *gigaBERT700* remote commands are directly related to setup parameters and results rather than to front panel keys and menu selections. For example, to set Generator frequency to 700 MHz you would issue the command **CLOCK_FREQ 700.0E+6** rather than issuing commands like "press the FREQ key", or "press the up/down arrow keys", and so on.

Printer Basics

Analyzer. The Analyzer can print reports directly on a printer connected to its PRINTER or RS-232C ports. Note that these two ports are commonly referred to as the parallel and serial ports respectively. The Analyzer can also print reports indirectly by sending them to an external GPIB controller. The Analyzer cannot, however, print reports directly to a GPIB printer.

Generator. The Generator has no explicit printing functions. But you can program an external controller to read the Generator's setup and print a setup report on one of the controller's printers.

Using the RS-232C Port

The following section describes how to set up and use the Generator or Analyzer RS-232C serial port.

Serial Interface Parameters

gigaBERT700 serial port parameters are listed in Table 7-1 along with their available values and default value. All of these parameters may be set up via the instrument's menu system. In addition, ECHO and XON/XOFF can be changed remotely via the GPIB or RS-232C port.

Table 7-1 RS-232C (Serial Port) Parameters

Parameter MENU and Description	Possible Values	Default Value
BAUD: Baud rate in bits per second.	300, 600, 1200, 2400, 4800, or 9600	9600
PARITY: Error detection.	Even, Odd, or None	Even
SIZE: Data bits per character.	7 or 8	8
EOL: End-of-Line terminator.	CR (ASCII decimal 13), LF (ASCII decimal 10), CR/LF, or LF/CR.	CR/LF
XON/XOFF: Flow control.	ON (enabled) or OFF (disabled)	ON
ECHO: Echo back to the controller each character received by the Analyzer).	ON (enabled) or OFF(disabled)	ON

To set up the Analyzer RS-232C port, use the following general procedure:

1. Press the F1 key to enter the menu system.
2. Select MORE (F1)
3. Select the RS-232C menu (F2)
4. Set up BAUD, PARITY, SIZE, EOL, XON/XOFF, and ECHO as desired.
5. Once you have made and locked in your changes (be sure to press F4 to exit each setup function) exit the menu system by pressing the F1 key until the normal display format returns.

Hardware Considerations

The Analyzer and Generator RS-232C interface is a 25-pin, female D-type connector located on the rear-panel. The pin-out of this connector is shown in Table 7-2. Note that the *gigaBERT700* RS-232C port is set up as a DCE (data communications equipment) device—that is, it receives on pin 2 and transmits on pin 3.

Table 7-2 RS-232C Connector Pin-out

PIN	NAME	FUNCTION
1.	GND	Protective Ground
2.	RxD	Received Data Input: Data is received by the *gigaBERT700* on this pin.
3.	TxD	Transmitted Data Output: Data is transmitted by *gigaBERT700* on this pin.
4.	CTS	Clear To Send. A high level or open applied to this pin indicates to the *gigaBERT700* that the controller or terminal is ready to receive data. A low level indicates that the controller or terminal is not ready. The *gigaBERT700* pulls this pin high internally with 27 kohms to +12V.
5.	RTS	Request to Send. The *gigaBERT700* always sets this pin high.
6.	DTR	Data Terminal Ready. The *gigaBERT700* always sets this pin high.
7.	GND	Signal Ground.
20.	DSR	Data Set Ready. This input is ignored.
all other pins		not used.

Cables

Use a straight-through (normal) cable when connecting the *gigaBERT700* to a DTE (data terminal equipment) device, or a null-modem cable when connecting to another DCE device.

Quick Test of the RS-232C Port

You can perform a quick test of the Analyzer or Generator RS-232C port using a terminal (or a PC running terminal emulation software) as follows:

1. De-power the instrument.
2. Attach the appropriate 25-pin cable from the instrument's RS-232C port to the appropriate RS-232C port on the terminal. Note that most terminals (and controllers) are set up as DTE and therefore use straight-through cables.
3. Power the instrument. Verify that a message using the following format appears on the terminal's display:
   *******TEKTRONIX BERT700 uu Vx.xx mm/yy**

   where: uu = RX (if Analyzer) or TX (if Generator)
   x.xx = software version number (e.g. 3.00).
   mm/yy = month and year of software version.

If the above message does not appear, then one or more of the following problems may exist:

1. The cable may be defective.
2. You may have selected the wrong cable type. Be sure to use a straight-through cable if the terminal is DTE, or a null-modem cable if the terminal is DCE.
3. The RS-232C port setup of the instrument (baud rate, data bits, parity, etc.) may not be compatible with that of the terminal.

Protocol

The *gigaBERT700* RS-232C port always operates in a non-protocol or "terminal" mode. Received characters are stored in a command buffer until a line terminator is received, at which point the command is executed immediately. While a command is buffered, that is before a line terminator is received, you may use the backspace key on your terminal to erase the last (right-most) character.

You may use EVEN or ODD parity to perform error checking on a byte-by-byte basis. In addition, if a received command mnemonic is not recognized or if an associated parameter is out of range, then the *gigaBERT700* will discard the command and issue an error message.

Command Format

Please refer to Chapter 8 for an explanation of the *gigaBERT700* command (line) format and a description of all commands. Note that the basic command format used on the RS-232C and GPIB ports is the same.

Error Messages

All commands received on the RS-232C port are checked for validity and to make sure they contain appropriate parameters. Valid commands are executed. Invalid commands will not be executed, but instead will cause the Generator or Analyzer to transmit one of the error messages shown in Table 7-3.

Table 7-3 RS-232C Port Error Messages

ERROR MESSAGE	MEANING
"*** Input Lost"	The RS-232C interface hardware has detected one or more lost or corrupted characters.
*** Input Buffer Overflow"	More than 80 characters are received without a line terminator.
*** Command Mnemonic Not Found"	Unknown command mnemonic received.
*** Invalid Command For Interface"	Command mnemonic found, but it is not valid for the RS-232C interface.
*** Invalid Command Type"	Command mnemonic found, but it has a missing or added "?" at the end.
"*** Too Few Parameters"	One or more expected parameters are missing.
"*** Too Many Parameters"	Too may parameters were received, or unknown characters were found trailing the command.
"*** Invalid Parameter"	Parameter is not valid for the command.
"*** Parameter Out of Range"	Parameter value is not in the range specified for the command.
"*** Parameter Not In Set"	Parameter value is not in the set of allowed values for the command.
"*** Invalid String Length"	Parameter character string is too long for the command.
"*** Parameter Separator"	An expected semicolon (;) between two parameters is missing or a command line is terminated immediately after a semicolon.
"*** Invalid Non-decimal Parameter"	Parameter is not in a valid non-decimal format, or the value of the parameter is out of the range 0 to 255 decimal.
"*** Command Execution Error"	The instrument did not execute the command properly.
"*** Out of Memory	Processor is out of memory.

Using the GPIB Port

The following section describes how to set up the GPIB port and provides an overview of *gigaBERT700* GPIB functions. Note that the following two parameters must be set up properly to use the GPIB port.

1. Address.
2. Message terminator.

GPIB Instrument Address

For normal operation, the GPIB bus address of a *gigaBERT700* Generator or Analyzer must be set in the range 0 to 30 decimal. However, from the front panel you can set the GPIB address above 30 or below 0 to put the instrument "off bus". The address of each instrument on a GPIB bus, including the Generator and Analyzer if they are on the same bus, must be unique. The GPIB address of a Generator or Analyzer is set using front panel keys as follows:

1. Press the ADDR key in the GPIB section of the front panel. The LED in the GPIB key will then turn on, and the display will show "GPIB aa", where aa is the instrument's current address.
2. Press the up/down keys closest to the GPIB section to set the instrument's address as required. In other words, use the CLOCK section up/down keys on the Generator or the INPUT section up/down keys on the Analyzer.
3. When GPIB address is set to the desired value, press the GPIB key again. The LED in the GPIB will turn off indicating that the new GPIB bus address is in effect.

You cannot change GPIB address via the GPIB port. However you can change GPIB address remotely via the RS-232C port.

GPIB Message Terminator

The GPIB message terminator may be set to either EOI or EOI/LF. When EOI is selected, the instrument will assert the GPIB EOI line along with the last byte of each message transmitted. When EOI/LF is selected, the instrument will add one byte containing the LF (line feed) character to the end of each message and then assert the EOI line. Use the GPIB menu function to set the GPIB terminator as follows:

1. Press F1 to enter the menu system.
2. Select the GPIB function (F3 on the first page of the Generator main menu, or F3 on the second page of the Analyzer main menu.

3. Use the pattern up/down keys to set the GPIB terminator to one of the following two values: EOI or EOI/LF.
4. The selected GPIB terminator will be in effect when you press F4 to exit the GPIB function.
5. Press F1 until you have exited the menu system.

You cannot change the GPIB terminator via the GPIB port. However you can change the GPIB terminator remotely via the RS-232C port.

Returning the Instrument to Local Mode

Most GPIB controllers can put instruments on their bus into a "remote" mode in which all front panel setup controls *except the GPIB LOCAL key* are disabled. The LED in the GPIB LOCAL key on the Generator or Analyzer front panel indicates whether the instrument is in the local mode (LED off) or remote mode (LED on). If the LED is on, you can press the LOCAL key to return the instrument to the local mode.

Procedure to Return the Instrument to the Local Mode:

- ❑ If the LED in the LOCAL key is on, you can return the instrument to the local mode by pressing the LOCAL key. At this point the LED will turn off, indicating that all front panel controls are again active.

Note that there is no way for you to put the instrument into the GPIB remote mode from the front panel or using menus. However, you can lock and unlock the front panel using the PANEL LOCK key, which offers the same functionality.

GPIB Interface Functions

The *gigaBERT700* is configured as a GPIB talker/listener. It does not provide any controller functions. Table 7-4 lists the GPIB functions described in ANSI/IEEE Std. 488.2-1987 that are supported by the *gigaBERT700*. **Table 7-4** GPIB Interface Functions

Subset	Implementation
SH1	Complete source handshake.
AH1	Complete acceptor handshake.
T6	Basic talker, serial poll, no talk-only, unaddressed if addressed to listen, no extended talker.
L4	Basic listener, no listen-only, unaddressed if addressed to talk, no extended listener.
SR1	Complete service request.
RL1	Remote/local capability including local lockout.
PP0	No parallel poll capability.
DC1	Complete device clear capability.
DT0	No device trigger capability.
C0	No controller capability.
E2	Tri-state drivers used on DI0 lines for maximum data transfer rate.

GPIB Connector Pin-outs

The *gigaBERT700* GPIB port is equipped with a standard GPIB 24-pin, D-type connector. The signal levels and pin assignments of this connector conform to ANSI/IEEE Std. 488.2-1987.

GPIB Command Format

Please refer to Chapter 8 for an explanation of the general *gigaBERT700* command format and a description of all commands. Note that the basic command format used on the GPIB port is identical to that used on the RS-232C port.

ANSI/IEEE-488.2 Programming Manual Requirements

This section explains how the *gigaBERT700* implements certain standard GPIB functions, as required by ANSI/IEEE Std. 488.2-1987.

Power-On Settings

When powered-on, the *gigaBERT700* will automatically restore all device settings to their "last powered settings"—in other words to their value when the instrument was last powered-off. No remote commands will affect this power-on rule. However if the instrument detects a problem in non-volatile (battery backed) RAM at power up, then factory default settings (Appendix B) will be restored rather than the last powered settings. A RAM problem at power up will be indicated in the LCD display by the message:
RAM Corruption.

Message Exchange

The *gigaBERT700* implements GPIB message exchange as follows:

1. The input buffer is command line oriented. A new buffer is provided for each new command line.
2. Each command line may contain a maximum of 80 characters.
3. The only *gigaBERT700* commands that can return more than one message unit are listed in Table 7-5 below.

Table 7-5 Commands That Generate Multi-Unit Responses

Analyzer	Generator
*lrn?	*lrn?
all_mem?	all_mem?
histry_stat?	amplitude?
word_mem_ord?	clock_memory?
word_mem?	offset?
	word_mem_ord?
	word_memory?

4. Command responses are generated immediately after they are parsed. In other words, the *gigaBERT700* will not wait for a read command before generating a response to a query command.

5. No commands are coupled.

Functional Elements

All functional elements in Tables 4.2 and 4.3 of ANSI/IEEE Std. 488.2-1987 that are used in *gigaBERT700* commands are listed below:

1. <PROGRAM MESSAGE>
2. <PROGRAM MESSAGE TERMINATOR>
3. <PROGRAM MESSAGE UNIT>
4. <PROGRAM MESSAGE UNIT SEPARATOR>
5. <COMMAND MESSAGE UNIT>
6. <QUERY MESSAGE UNIT>
7. <COMMAND PROGRAM HEADER>*
8. <QUERY PROGRAM HEADER>*
9. <PROGRAM HEADER SEPARATOR>
10. <PROGRAM DATA SEPARATOR>
11. <PROGRAM DATA>
12. <DECIMAL NUMERIC PROGRAM DATA>
13. <CHARACTER PROGRAM DATA>
14. <NON-DECIMAL NUMERIC PROGRAM DATA>

* The *gigaBERT700* cannot process a <compound command program header> or a <compound query program header>.

For more information on this subject, see Sections 4.3, 7.1.1, and 7.3.3 of ANSI/IEEE Std. 488.2-1987.

Specific Command Implementations

Reset Command. As defined in ANSI/IEEE Std. 488.2-1987, the *gigaBERT700* reset command (*rst) does the following:

1. Resets all device settings to their default values (Appendix B) except for:
   a. stored word patterns (Analyzer and Generator)
   b. stored frequencies (Generator only), and
   c. all remote interface settings.
2. Ignores macros (macros are not implemented in the *gigaBERT700*).
3. Forces the *gigaBERT700* into the Operation Complete Command Idle State (OCIS) and Operation Complete Query Idle State (OQIS).

Self Test Query. The scope of the *gigaBERT700* self test function is limited; it tests basic functionality.

Overlapped vs. Sequential Commands. All *gigaBERT700* commands are sequential.

Operation Complete Message. *gigaBERT700* command operation is always immediate. There are no overlapping commands.

GPIB Status and Event Reporting System

This section explains the GPIB status and event reporting functions provided by the *gigaBERT700*. These functions are specified in, and compatible with ANSI/IEEE Std. 488.2-1987. For detailed information on GPIB status reporting functions, refer to this document.

The purpose of the *gigaBERT700* status and event reporting system is to alert the GPIB controller when either an important change-of-status or event occurs. The instrument accomplishes this by maintaining several "status registers" and asserting the SRQ (service request) line on the GPIB bus when one or more bits in these registers are set to one. The controller can then find out which instrument or instruments initiated the SRQ using a serial poll procedure. The user can enable or disable specific status bits—and therefore control which status changes or events result in an SRQ—by setting up various "enable" registers in the instrument.

Note that *gigaBERT700* status and enable registers are also available when using RS-232C control. Specifically, you can read status registers and set enable registers via the RS-232C interface. However the SRQ alerting function is available only on the GPIB bus.

Overview of Status and Enable Registers

The *gigaBERT700* Generator and Analyzer have two *general purpose* status registers called:

- the **Standard Event Status Register (SESR)**, and
- the **Status Byte Register (SBR)**.

These two status registers, which indicate the overall status of the instrument, are defined in ANSI/IEEE Std. 488.2-1987. The Analyzer also contains a third status register which indicates the current state of various measurement processes. This register deals with functions specific to the *gigaBERT700* Analyzer and is not defined in ANSI/IEEE Std. 488.2-1987. The name of this status register is:

- the **Test Status Register (TSR)**.

The Generator and Analyzer have one enable register associated with each of their status registers. The names of the three *gigaBERT700* enable registers are:

- The **Event Status Enable Register (ESER)**,
- The **Test Status Enable Register (TSER)**, and
- The **Service Request Enable Register (SRER)**.

Note that the TSER enable register, like the associated TSR status register, is found only in the Analyzer.

How Status and Enable Registers Work. A status register may contain defined (used) bits and undefined (unused) bits. Each defined bit in a status register corresponds to a given instrument status or event. Once cleared (set to zero) the value of a status bit will remain zero (false) as long as the corresponding event or status does not occur. However if it is enabled, the value of a status bit will be set to one (true) when the corresponding event or status occurs. Status bits are latched. That is, once a status bit is set to one, it will remain in this state, *even if the corresponding event or status becomes false,* until the bit is reset by a command or when the instrument is depowered.

Each status register has an associated enable register. Moreover, each defined bit in a status register has a corresponding defined bit in the associated enable register. When an enable bit is set to zero, then the corresponding status bit is ignored by the instrument regardless of the state of the relevant event or instrument status. However when an enable bit is set to one, the corresponding status bit is enabled.

☑ **NOTE**: At power up, all three *gigaBERT700* enable registers are reset to 00000000 binary to effectively disable all status reporting functions. Use the appropriate set commands to program each enable register as desired.

Commands. The contents of any *gigaBERT700* status or enable register can be read by an external controller using the appropriate query command. The contents of any enable register can be set to a particular value using the appropriate set command. The contents of the SESR register can be cleared using the Clear Status (*CLS) command. Note that the SESR and TSR are automatically cleared (reset) after they are queried. For more information on GPIB commands, see Chapter 8.

The correspondence between *gigaBERT700* status registers, enable registers, and commands is summarized in Table 7-6.

Table 7-6 Status Registers, Enable Registers, Related GPIB Commands

Status Register	Status Register Query Commands	Enable Register	Enable Register Commands	
			Set	Query
Standard Event Status Register (SESR)	*ESR?	Event Status Enable Register (ESER)	*ESE	*ESE?
Test Status Register (TSR)	TSR?	Test Status Enable Register (TSER)	TSE	TSE?
Status Byte Register (SBR)	*STB?	Service Request Enable Register (SRER)	*SRE	*SRE?

☑ **NOTE**: Use the *CLS command to clear (reset) the SESR and return the instrument to the Operation Complete Command Idle State and the Operation Complete Query Idle State. In this state the instrument has no data in its input or output buffers and is not executing a command.

☑ **NOTE**: The *ESR? and TSR? query commands also clear (reset) the SESR and TSR status registers respectively.

Standard Event Status Register

The Standard Event Status Register (SESR) is a status register that indicates errors in command syntax and related occurrences. The name of each bit in the SESR is shown in Figure 7-1. The function of each bit in the SESR is defined in Table 7-7.

Figure 7-1 Standard Event Status Register (SESR)

7	6	5	4	3	2	1	0
PON	URQ	CME	EXE	DDE	QYE	RQC	OPC

Table 7-7 SESR Bit Definitions

Bit	Definition
7 (MSB)	**PON** (Power On): Set to one when the instrument is first powered on.
6	**URQ** (User Request): Not used.
5	**CME** (Command Error): Set to one when a command header (mnemonic) has been received that is not recognized or is invalid.
4	**EXE** (Execution Error): Set to one when an error has occurred while the instrument was responding to a set command or query. May indicate: a parameter is out of range; a command uses too many or too few parameters; or a command cannot be properly executed due to the instrument's current state.
3	**DDE** (Device Dependent Error): Set to one if input data has been lost at the interface (corrupted characters) or the input buffer has overflowed because a command exceeded the 80 character limit without a terminator.
2	**QYE** (Query Error): Set to one if: a) an attempt has been made to query the output queue when there are no messages available or pending, b) a command is received but the output queue is not empty, or c) an attempt has been made to query the output queue when an unterminated command is in the input queue.
1	**RQC** (Request Control): Not used.
0 (LSB)	**OPC** (Operation Complete): Set to one after a *OPC command is received.

Event Status Enable Register

The Event Status Enable Register (ESER) is the enable register associated with the SESR status register. Each enable bit in the ESER occupies the same bit position as the corresponding status bit in the SESR (See Figure 7-1 above).

Test Status Register

The Test Status Register (TSR), which is found in the Analyzer only, indicates the completion of measurement intervals or the occurrence of various error events. The name of the each defined bit in the TSR is shown in Figure 7-2. The function of each defined bit in the TSR is explained in Table 7-8.

Figure 7-2 Test Status Register (TSR)

7	6	5	4	3	2	1	0
--	--	--	PE	SL	TE	EOT	EOW

Table 7-8 Test Status Register Bit Definitions

Bit	Definition
5 - 7 MSB	Not defined.
4	**PE** (Phase Error): Set to one if a phase error has occurred. A phase error is declared by the Analyzer when the phase relationship between CLOCK and DATA, or CLOCK and REF DATA, violates the instrument's setup or hold times.
3	**SL** (Synchronization Loss): Set to one if BER has exceeded the current synchronization (SYNC) threshold.
2	**TE** (Threshold Error): Set to one when a test is in progress and a Threshold Errored Second (TES) occurs. A TES is a second in which BER is above the Analyzer's current Test Error Rate Threshold.
1	**EOT** (End of Test): Set to one at the end of each TEST measurement interval.
0 (LSB)	**EOW** (End of Window): Set to one at the end of each WINDOW measurement interval.

Test Status Enable Register

The Test Status Enable Register (TSER) is the enable register associated with the TSR status register. Each enable bit in the TSER occupies the same bit position as the corresponding status bit in the TSR. Note that the TSER enable register, like the associated TSR status register, is found only in the Analyzer.

Status Byte Register

The Status Byte Register (SBR) indicates the overall status of the instrument and is used to control the SRQ line on the GPIB bus. The name of each defined bit in the SBR is shown in Figure 7-3. The function of each defined bit in the SBR is described in Table 7-9.

Figure 7-3 Status Byte Register (SBR)

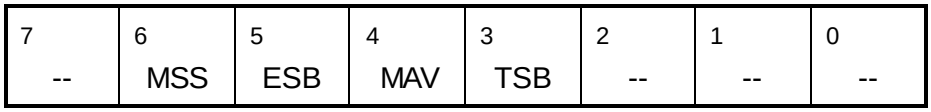

Table 7-9 Status Byte Register Bit Definitions

Bit	Definition
7 (MSB)	Not defined.
6	**MSS** *(Master Status Summary): This bit summarizes the state of the three other bits in the SBR. It is set to 0 if all other bits are 0. It will be set to 1 when any other bit in the SBR equals 1 and its corresponding bit in the SRER is set to one. The status of the MSS bit is reevaluated each time a bit in the SBR or the Service Request Enable Register (SRER) changes.
5	**ESB** (Event Status Bit): This bit summarizes the Standard Event Status Register (SESR). It is set to 0 if all bits in the SESR are 0. It is set to 1 if any enabled bit in the SESR equals 1. If the ESB is enabled and set to 1, then the RQS and MSS bits will be set to 1. The status of the ESB bit is reevaluated each time one of the bits in the SESR or the Event Status Enable Register (ESER) changes.
4	**MAV** (Message Available): This bit is set to 1 when there is an output available for the controller.
3	**TSB** **(Test Status Bit): This bit summarizes the Test Status Register (TSR). It is set to 0 if all bits in the TSR are 0. It is set to 1 if any enabled bit in the TSR equals 1. If the TSB is enabled and set to 1, then the MSS and RQS bits will be set to 1. The status of the TSB bit is reevaluated each time one of the bits in the TSR or Test Status Enable Register (TSER) changes. *NOTE: Used only in the Analyzer.*
0 - 2	Not defined.

NOTES:

* When you use a serial poll to read the SBR, bit 6 is the RQS bit. When you use the *STB? query to read the SBR, bit 6 is the MSS bit.

** Bit 3 (TSB) is used only in the Analyzer.

Service Request Enable Register

The Service Request Enable Register (SRER) is the enable register associated with the SBR status register defined above. The SRER contains an enable bit for the ESB, MAV and TSB bits in the SBR. However there is no enable bit for the MSS or the RQS bits. That is, the MSS and RQS bits are always enabled.

Remote Commands

This chapter explains the syntax used by the *gigaBERT700* remote command language, and defines all set and query commands. In addition, commands are listed and briefly described in both alphabetical and functional order.

Overview

This section defines the *gigaBERT700* command syntax including command types, parameter types, delimiters used between command elements, and terminators used at the end of command lines.

Symbols

Table 8-1 shows the symbols used in this chapter to describe *gigaBERT700* commands and responses.

Table 8-1 Symbols

Symbol	Meaning
<CR>	Carriage return (ASCII decimal 13).
<LF>	Line Feed (ASCII decimal 10).
<EOI>	End or Identify, a message terminator signal specified in ANSI/IEEE Std. 488.2-1987
<ui>	Unsigned integer in range 0 through 65,535
<NR1>	Signed integer value.
<NR2>	Floating point value, without an exponent.
<NR3>	Floating point value, with an exponent.
<non-decimal numeric>	A non-decimal integer in the range 0 - 255 (decimal) with leading "#H" (hexadecimal), "#Q" (octal), or "#B" (binary). Examples: Hexadecimal: #HFF Octal: #Q377 Binary: #B11111111
<qstring>	A quoted string; that is a character string with beginning and ending quotes.
[ ]	Enclosed argument is required.
|	Exclusive OR. For example the argument [a | b | c] means that you must include one and only one of the following parameters: a, b, or c.

Command Types: Set and Query

There two basic types of *gigaBERT700* commands: set commands and query commands. Set commands are used to make setup changes or to cause a status change, for example to start or stop a test. Query commands ask the instrument to respond with the contents of a status register or the value of a given setup parameter.

gigaBERT700 commands may have only a query form or only a set form, however most commands have both. When a command has both a set and query form, the name or "mnemonic" used for the query form will be identical to its corresponding set command form, except for an added "?". For example the following are the mnemonics for the set and query form of the data threshold command:

- DATA_THRES (set command)
- DATA_THRES? (query command)

Note that in this User's Guide, query commands may be referred to as simply "queries", while set commands may be referred to as simply "commands".

Command Line Format

Command Names (Headers)

Every *gigaBERT700* command starts with a command header. Headers are character strings that contain either an entire command name, or a legal abbreviation of a command name. Legal command name abbreviations must include the leading significant characters in the command name. For example, in the save_word command only the first two letters are significant. Therefore the save_word command header may contain any of the following character strings:

save_word
save_wor
save_wo
save_w
save_
save
sav
sa

The minimum abbreviation for each command name is identified in the Command Descriptions section later in this chapter. The use of command abbreviations is often useful when you are operating a *gigaBERT700* Generator or Analyzer manually from a terminal. However when

including command names in control programs it is recommended that the full command names always be used as command headers. This improves readability and reduces the chance that a control program will be incompatible with future versions of *gigaBERT700* software which may include additional commands.

Command Line Rules

The following rules summarize the basic syntax of *gigaBERT700* commands:

Command Lines: A given command line may contain one or multiple commands. If a command line contains multiple commands, commands will be separated by a ";" (semicolon).

Command Line Terminator

RS-232C Interface: Command lines issued to the instrument should be terminated by a simple carriage return (CR). Responses generated by the instrument will be terminated as specified by the user in the RS-232 EOL menu function, that is CR, LF, CR/LF or LF/CR.

GPIB Interface: Command lines issued to the instrument can be terminated by either EOI or EOI/LF. Responses generated by the instrument will be terminated as specified by the user in the GPIB menu function, that is either EOI or EOI/LF.

Maximum Number of Characters per Line: Command lines may contain a maximum of 80 characters before the terminator.

Command Headers (Names): Each command must start with a header. This header must contain either the full name of the command, or an abbreviation containing at least all of the leading significant characters identified for that command name. In addition, query commands must end with a "?".

Upper and Lower Case: All characters in a *gigaBERT700* command line may be entered in either upper or lower case.

Arguments: Commands may include one or more arguments (parameters) following the header. The first argument following the header must be separated from the header by one or more blank characters (spaces). Subsequent arguments must be separated from previous parameters using commas.

Blank Characters (Spaces): One or more spaces are required between the command header and first parameter (if any). Otherwise spaces are ignored by the *gigaBERT700* and may be used on a command line between headers, parameters, or required separators for readability.

Setting Arguments Outside of Legal Ranges

If you issue a set command with an argument value that is outside the allowed range for that argument, then the instrument will reject the command.

Numeric Responses

If the response to a query command is a number, then it will be specified as one of the following types:

Table 8-2 Numeric Response Types

Type	Description
<NR1>	decimal integer (e.g., 8)
<NR2>	decimal real number without exponent (e.g., 2.00)
<NR3>	decimal real number with exponent (e.g., 700.0E+6)
<Non-decimal numeric>	non-decimal number with leading "#H" (hexadecimal), "#Q" (octal), or "#B" (binary).

Command Examples

The following are some typical *gigaBERT700* set and query command examples:

Table 8-3 Command Examples

Command	Action or Response
clock_freq?	Returns the current output clock frequency setup of the Generator or the measured input clock frequency of the Analyzer
word_memory?	Returns the saved word patterns in all 10 word memory locations.
word_memory? 7	Returns the saved word pattern in word memory location 7.
word memory 9, 16, #Haa, #H23	Sets the 16 bits of the word pattern stored at location 9 to the bit sequence represented by AA23 hexadecimal.
word_bits 8, #Q307	Sets the first eight bits of the current active pattern to the bit sequence represented by 307 octal.
recall_word 7	Recalls the word pattern saved in location 7 and makes it the current active pattern.
word_mem_len 6 , 16	Sets the length of the word pattern stored in location 6 to 16 bits.
view_angle?	Returns the current display view angle setup.
view_angle 3	Sets the view angle to 3.
rs_prompt "700"	Sets the terminal display prompt to "700".
all_mem?	Returns the word patterns saved in all 10 word memory locations.

Command Summary – Alphabetical

The following is a listing of all *gigaBERT700* Generator and Analyzer commands and the page number of their full description.

*cls 8-12
*ese [n] 8-12
*ese? 8-13
*esr? 8-13
*idn? 8-13
*lrn? 8-14
*opc 8-14
*opc? 8-14
*rst 8-15
*sre [n] 8-15
*sre? 8-16
*stb? 8-16
*tst? 8-17
*wai 8-17
all_mem? 8-30
amplitude [v] 8-37
amplitude? 8-37
audio_rat_up and audio_rat_dn 8-81
audio_rat_up [v] and audio_rat_dn [v] 8-81
audio_rate [v] 8-81
audio_rate? 8-82
audio_vol [v] 8-82
audio_vol? 8-82
audio_vol_up and audio_vol_dn 8-82
audio_vol_up [v] and audio_vol_dn [v] 8-83
auto_search [auto | off | disab] 8-64
auto_search? 8-64
byte_block [a], [i], [b1], ..., [bn] 8-87
byte_block? [a] 8-87
byte_delete [a], [i] 8-88
byte_edit [a], [b1] 8-88
byte_edit? [a] 8-88
byte_fill [i], [b1], [b2], ..., [bn] 8-89
byte_insert [a], [i], [b1], ..., [bn] 8-89
byte_length [m], [n] 8-90
byte_length? 8-90
byte_sync [n] (Analyzer only) 8-90
byte_sync? (Analyzer only) 8-91
clock_amp_up and clock_amp_dn 8-37
clock_amp_up [v] and clock_amp_dn [v] 8-38
clock_ampl [v] 8-38

clock_ampl? 8-38
clock_freq [v] 8-33
clock_freq? 8-33
clock_freq? 8-45
clock_input [single | diff] 8-54
clock_input? 8-54
clock_memory [m], [f] 8-33
clock_memory? [m] 8-34
clock_off_up and clock_off_dn 8-38
clock_off_up [v] and clock_off_dn [v] 8-39
clock_offset [v] 8-39
clock_offset? 8-39
clock_source [int | ext] 8-34
clock_source? 8-34
clock_step [v] 8-34
clock_step? 8-35
clock_stp_up and clock_stp_dn 8-35
clock_stp_up [v] and clock_stp_dn [v] 8-35
clock_term [gnd | neg_2V] 8-36
clock_term [neg_2v | gnd | ac | pos_3v] 8-54
clock_term? 8-36
clock_term? 8-55
clock_thr_up and clock_thr_dn 8-55
clock_thr_up [v] and clock_thr_dn [v] 8-55
clock_thres [v] 8-56
clock_thres? 8-56
data_amp_up and data_amp_dn 8-39
data_amp_up [v] and data_amp_dn [v] 8-40
data_ampl [v] 8-40
data_ampl? 8-40
data_del_up and data_del_dn 8-56
data_del_up [v] and data_del_dn [v] 8-57
data_delay [v] 8-57
data_delay? 8-57
data_input [single|diff] 8-58
data_input? 8-58
data_invert [on | off] 8-19
data_invert? 8-19
data_off_up and data_off_dn 8-40
data_off_up [v] and data_off_dn [v] 8-41
data_offset [v] 8-41
data_offset? 8-41
data_pattern [prbs | word | rdata] 8-19
data_pattern? 8-20
data_term [neg_2v | gnd | ac | pos_3v] 8-58
data_term? 8-58
data_thr_up and data_thr_dn 8-59

data_thr_up [v] and data_thr_dn [v].....8-59
data_thres.....8-59
data_thres?.....8-60
date ["yyyy-mm-dd"].....8-84
date?.....8-84
disp_select [total | window | test].....8-64
disp_select?.....8-65
edit_begin [n].....8-91
edit_cntrl?.....8-91
edit_end [n].....8-92
error_rate [off | ext | rate_3 | rate_4 | rate_5 | rate_6 | rate_7].....8-43
error_rate?.....8-43
error_reset.....8-65
error_single.....8-43
gpib_address [v].....8-26
gpib_address?.....8-26
gpib_bus [off_bus | talk_listen].....8-26
gpib_bus?.....8-27
header [on | off].....8-31
header?.....8-31
histry_bits?.....8-65
histry_clear.....8-65
histry_phase?.....8-66
histry_power?.....8-66
histry_stat?.....8-66
histry_sync?.....8-67
logo?.....8-31
offset [v].....8-41
offset?.....8-42
options?.....8-32
prbs_length [v].....8-20
prbs_length?.....8-20
print_enable [on|off].....8-79
print_enable?.....8-79
print_port [parallel | gpib | serial].....8-79
print_port?.....8-80
print_string ["s"].....8-80
psync [a].....8-92
psync?.....8-92
rdata_del_up and rdata_del_dn.....8-60
rdata_del_up [v] and rdata_del_dn [v].....8-60
rdata_delay [v].....8-61
rdata_delay?.....8-61
rdata_term [neg_2v | gnd | ac | pos_3v].....8-61
rdata_term?.....8-61
rdata_thr_up and rdata_thr_dn.....8-62
rdata_thr_up [v] and rdata_thr_dn [v].....8-62

rdata_thres [v] 8-62
rdata_thres? 8-63
recall_freq [m] 8-36
recall_mark [m1_8 | m1_4 | m1_2 | m3_4 | m7_8] 8-93
recall_prom [n] 8-93
recall_word [m] 8-21
res_bits? 8-45
res_cur_rate? 8-45
res_dm? 8-46
res_dm_per? 8-46
res_efs? 8-46
res_efs_per? 8-47
res_elapsed? 8-47
res_errors? 8-47
res_es? 8-48
res_es_per? 8-48
res_los? 8-48
res_pha_es? 8-49
res_ses? 8-49
res_ses_per? 8-49
res_start? 8-50
res_stop? 8-50
res_sync? 8-50
res_tes? 8-51
res_tes_per? 8-51
res_tot_rate? 8-51
res_us? 8-52
res_us_per? 8-52
rs_echo [on | off] 8-27
rs_echo? 8-27
rs_pmt_lf [on | off] 8-27
rs_pmt_lf? 8-28
rs_prompt [s] 8-28
rs_xon_xoff [on | off] 8-28
rs_xon_xoff? 8-29
save_freq [m] 8-36
save_word [m] 8-21
sync? 8-67
test_discard 8-69
test_length [t] 8-69
test_length? 8-69
test_mode [untimed | timed | repeat] 8-70
test_mode? 8-70
test_prev [current | previous] 8-70
test_prev? 8-71
test_print 8-71
test_report [eot | on_error | both | none] 8-71
test_report? 8-72

test_squelch [on | off] 8-72
test_squelch? 8-72
test_state [run | stop] 8-73
test_state? 8-73
test_thres [v] 8-73
test_thres? 8-74
time [s] 8-84
time? 8-85
total_bits? 8-52
total_error? 8-53
total_rate? 8-53
total_time? 8-53
tse [v] (Analyzer Only) 8-17
tse? (Analyzer Only) 8-17
tsr? (Analyzer Only) 8-18
ttl20_reset and ttl20_error? 8-67
view_angle [v] 8-32
view_angle? 8-32
win_bit_len [v] 8-75
win_bit_len? 8-75
win_bits? 8-75
win_error? 8-75
win_mode [bits | sec] 8-76
win_mode? 8-76
win_prev [current | previous] 8-76
win_prev? 8-76
win_rate? 8-77
win_report [on | off] 8-77
win_report? 8-77
win_sec_len [s] 8-77
win_sec_len? 8-78
win_time? 8-78
word_bits [le], [b1 | b2] 8-21
word_bits? 8-22
word_length [le] 8-22
word_mem_len [m], [le] 8-22
word_mem_ord [m], [msb | lsb] 8-23
word_mem_ord? 8-23
word_mem_ord? [m] 8-23
word_memory [m], [le], [b1], [b2] 8-24
word_memory? [m] 8-24
word_order [msb | lsb] 8-24
word_order? 8-25

Command Descriptions

The following section defines each *gigaBERT700* set and query command. Unless noted otherwise, the following conventions will be followed in the command descriptions in later sections of this chapter:

Command Headers: Command headers will be shown using the entire command name in lower case. For legal abbreviations, see the **Command Summary – Alphabetical** section earlier in this Chapter.

Set and Query Command Pairs:

Commands that have both forms will be listed under the *set* command name. For example the data threshold set and query commands above will be listed under the name DATA_THRES.

Common and Proprietary GPIB Commands

The following GPIB "common commands" defined in ANSI/IEEE Std. 488.2-1987.

*cls

Clear Status. This set command clears the Standard Event Status Register (SESR) and the event status bit (ESB) in the Status Byte Register (SBR). In addition it puts the instrument into the Operation Complete Command Idle State and the Operation Complete Query Idle State.

Min. Abbr.	*cls
Example	*cls

*ese [n]

Event Status Enable. This command sets the Event Status Enable Register (ESER) to the bit sequence corresponding to n, where n is a decimal number in the range 0 to 255.

Min. Abbr.	*ese
Argument	n: 0 to 255 decimal.
Example	*ese 255 (sets the ESER to 11111111 binary)

*ese?

Event Status Enable (Query). Returns a decimal number in the range 0 to 255 corresponding to the contents of the Event Status Enable Register (ESER).

Min. Abbr. *ese?

Returns <NR1>
where <NR1> is a decimal number from 0 to 255.

Example
*ese? (command)
255 (response)

*esr?

Event Status Register (Query). Returns a decimal number in the range 0 to 255 corresponding to the contents of the Standard Event Status Register (SESR).

Min. Abbr. *esr?

Returns <NR1>
where <NR1> is a decimal number in the range 0 to 255.

Example
*esr? (command)
213 (response)

*idn?

Identify (Query). Returns the *gigaBERT700* Generator or Analyzer identification, including company name, BERT model number, Generator or Analyzer identifier, and software version number.

Min. Abbr. *idn?

Returns TEKTRONIX, BERT-700 [RX|TX], 0, Vs.ss
where:

RX indicates Analyzer
TX indicates Generator
Vs.ss = software version number (e.g. V3.00).

Example
*idn?
(command)
TEKTRONIX, BERT-700 RX, 0, V3.00 (response)

*lrn?

Learn (Query). Returns a character string listing the instrument's current setup, *except for*:

- information on the remote ports,
- calibration values,
- stored frequencies, or
- stored words

The returned string will consist of a series of commands (headers plus parameters). These commands may be stored by the controller and used to restore the instrument to the same setup at a later time.

Min. Abbr. *lrn

Example:

```
lrn?                                (command)
AUDIO_RATE 4                        (response) ....
AUDIO_VOL 0
AUTO_SEARCH AUTO
BYTE_LENGTH 8,0
....
WIN_SEC_LEN "00:00:1"
WORD_ORDER MSB
```

*opc

Operation Complete. This command will cause the OPC bit in the Status Byte Register to be set to one. If the OPC bit is enabled, this will result in an SRQ. Thus, the ***opc** command can be issued after a group of setup commands to determine when all of the setup commands have been executed.

Min. Abbr. *opc

Example *opc

*opc?

Operation Complete (Query). This query command will cause the instrument to return the ASCII character for "1" when all previous commands and queries have been completed. Thus the ***opc?** command may be used to determine when the instrument has completed a group of commands.

Min. Abbr. *opc?

Example	*opc?	(command)
	1	(response)

*rst

Reset. This command causes the instrument to return to its factory default settings and to enter a known operation state. Specifically ***rst** does the following:

- ❑ puts the instrument into the Operation Complete Command Idle State.
- ❑ puts the instrument into the Operation Complete Query Idle State.
- ❑ returns most setup parameters to their factory default settings (Appendix B).

However ***rst** does not impact any of the following:

- ❑ the setup of the RS-232 or GPIB ports.
- ❑ GPIB address.
- ❑ calibration data.
- ❑ the Standard Event Status Register (SESR).
- ❑ the Event Status Enable Register (ESER).
- ❑ the power-on status clear flag setting.
- ❑ stored frequencies or words.

Min. Abbr.	*rst
Example	*rst

*sre [n]

Service Request Enable. This command sets the Service Request Enable

(SRER) to the bit sequence corresponding to n, where n is a decimal number in the range 0 to 255.

Min. Abbr.	*sre
Argument	n: 0 to 255 decimal
Example	*sre 48 (sets SRER to 00110000 binary)

*sre?

Service Request Enable (Query). This query command returns a decimal number in the range 0 to 255 corresponding to the contents of the Service Request Enable Register.

Min. Abbr. *sre?

Returns <NR1>
where <NR1> is a decimal number in the range 0 to 255.

Example

*sre?	(command)
32	(response)

(Indicates that the SRE contains 00100000 binary).

*stb?

Status Byte (Query). Returns a decimal number in the range 0 to 255 corresponding to the contents of the Status Byte Register (SBR).

Min. Abbr. *stb?

Returns <NR1>
where <NR1> is a decimal number in the range 0 to 255.

Example

*stb?	(command)
96	(response)

*tst?

Self Test. Causes the instrument to perform a self test and return the result. A result of 0 means the self test was successful. A return of any other value means the self test was not successful. The *gigaBERT700* self test is limited in scope.

Min. Abbr.	*tst?	
Returns	0	(if successful)
Example	*tst?	(command)
	0	(indicates successful self test)

*wai

Wait. This command forces the instrument to stop processing any additional commands until all pending operations are completed.

Min. Abbr.	*wai

tse [v] (Analyzer Only)

Test Status Enable. This command sets the Test Status Enable Register to the bit sequence corresponding to v, where v is a decimal number in the range 0 to 255.

Min. Abbr.	tse	
Argument	n:	<NR1>, in the range 0 to 255.
Example	tse 255	
	(sets the TSR to 11111111 binary)	

tse? (Analyzer Only)

Test Status Enable (Register) Query. This command returns a decimal number representing the current contents of the Test Status Enable Register (TSER).

Min. Abbr.	tse?	
Returns	<NR1>, in the range 0 to 255.	
Example	tse?	(command)
	TSE 255	(response)

tsr? (Analyzer Only)

Test Status Register Query. This command returns a decimal number representing the current contents of the Test Status Register (TSR).

Min. Abbr.	tsr?	
Returns	<NR1>, in the range 0 to 255.	
Example	tsr?	(command)
	TSR 224	(response)

Commands Shared by the Generator and Analyzer

Except where noted, the following commands are found in both the Generator and Analyzer command sets.

Pattern and Word Commands

Use these commands to select a pattern, enable or disable pattern inversion, create and save word patterns, and perform related pattern functions.

data_invert [on | off]

Data Inversion. This command enables or disables logical inversion of the Generator data *output* bit sequence or the Analyzer *input* bit sequence.

Min. Abbr.	data_inv
Arguments	on: enables data inversion off: disables data inversion
Example	data_invert off

data_invert?

Data Inversion Query. Returns a character string indicating whether Generator output data inversion or Analyzer input data inversion is enabled (on) or disabled (off).

Min. Abbr.	data_inv?
Returns	[on | off]
Example	data_invert? (command) DATA_INVERT OFF

data_pattern [prbs | word | rdata]

Data Pattern. Sets the Generator pattern mode to PRBS or word, or the Analyzer pattern mode to PRBS, word, or reference data.

Min. Abbr.	data_p
Arguments	**prbs**: selects the PRBS pattern mode. **word**: selects the word pattern mode.

rdata: selects the reference data mode (**Analyzer only**).

Example data_pattern prbs

data_pattern?

Data Pattern Query. Returns a character string indicating the current Generator data pattern mode.

Min. Abbr. data_p?

Returns [prbs | word] (Generator)
[prbs | word | rdata] (Analyzer)

Example data_pattern? (command)
DATA_PATTERN PRBS (response)

prbs_length [v]

PRBS Length. Selects the current PRBS pattern which becomes the current active pattern if and only if pattern "mode" is set to PRBS (see data_pattern command). The argument [v] may be set to 7, 15, 17, 20, or 23 corresponding to the five PRBS patterns that can be transmitted by the Generator and Analyzed by the Analyzer.

Min. Abbr. prb

Arguments
7: Selects the PRBS with a length of 2^7-1 bits.
15: Selects the PRBS with a length of 2^{15}-1 bits.
17: Selects the PRBS with a length of 2^{17}-1 bits.
20: Selects the PRBS with a length of 2^{20}-1 bits.
23: Selects the PRBS with a length of 2^{23}-1 bits.

Example prbs_length 23

prbs_length?

PRBS Length Query. Returns an integer n, where 2^n-1 is the length of the current prbs pattern.

Min. Abbr. prb

Returns <NR1> which may equal 7, 15, 17, 20, or 23.

Example prbs_length? (command)
PRBS_LENGTH 23 (response)

recall_word [m]

Recall Word. Causes the instrument to recall the word pattern saved at location "m" and make this pattern the current word pattern and the active pattern.

Min. Abbr. recall_w

Arguments m: 0, 1, ..., 9 (0, ..., 7 for 128k option)

Example recall_word 5

save_word [m]

Save Word. Causes the instrument to save the current word pattern to word memory location "m".

Min. Abbr. save_w

Arguments m: 0, 1, ..., 9 (0, ..., 7 for 128k option)

Example save_word 5

word_bits [le], [b1 | b2]

Word Bits. Sets current word length to **le** bits, and sets the current word pattern to the bit sequence represented by **b1** and **b2**.

Min. Abbr. word_b

Arguments **le**: 8 or 16.

b1: #00 to #FF (hexadecimal)
#Q000 to #Q377 (octal)
#B00000000 to #B11111111 (binary)

b2: same as b1. However, b2 is allowed only if **le** (length) is set to 16.

Example word_bits 16, #B10101010, #B11110000

word_bits?

Word Bits Query. The response will be in the form [n] [byte 1] [byte 2], where **n** is either 8 or 16 (the current word length) and **byte 1** and **byte 2** are hex, octal, or binary representations of the first and second bytes in the pattern. Note that **byte 2** will be included only if pattern length is 16.

Min. Abbr. word_b?

Returns <NR1>, <non-decimal numeric(s) >

Example word_bits? (command)
WORD BITS 16, #HAA, #HF0 (response)

indicating that the current word length is 16 bits and the current pattern is AAF0 hex.

word_length [le]

Word Length. Sets the current word pattern length to 8 or 16 bits.

Min. Abbr. word_l

Argument **le**: 8 or 16.

Example word_length 16

☑ **NOTE**: There is no query form to the **word_length** command. However, you may use the **word_bits?** query to read the current word length.

word_mem_len [m], [le]

Word Memory Length. Sets the length of the word pattern saved in location **m** to **le** bits.

Min. Abbr. word_mem_l

Arguments **m**: 0, 1, ..., 9 (0, ..., 7 for 128k option)
le: 8 or 16.

Example word_mem_len 5, 16

(sets the length of word memory 5 to 16 bits)

☑ **NOTE**: There is no query form to this command. However, you can use the **word_memory? [m]** query to read the length of the word saved at location m

word_mem_ord [m], [msb | lsb]

Word Memory Order. Sets the bit order of the word saved at location **m** to either "msb" (most significant bit first) or "lsb" (least significant bit first).

Min. Abbr. word_mem_o

Arguments
m: 0, 1, ..., 9 (0, ..., 7 for 128k option)
msb: most significant bit first
lsb: least significant bit first

Example word_mem_ord 9, msb

(selects the most significant bit first order for word memory location 9)

word_mem_ord?

Word Memory Order Query (All). Returns a command string ("MSB" or "LSB") indicating the bit order of each of the 10 word memory locations. The response will consist of 10 message units. (8 for 128k option)

Min. Abbr. word_mem_o?

Returns <NR1>, [MSB | LSB]; <NR1> [MSB | LSB]; ... etc.

Example
word_mem_ord? (command)
WORD_MEM_ORD 0, LSB; (response)
WORD_MEM_ORD 1 MSB;
WORD_MEM_ORD 2 MSB;
....

word_mem_ord? [m]

Word Memory Order Query. Returns a command string ("MSB" or "LSB") indicating the bit order of the word saved at location m.

Min. Abbr. word_mem_o

Arguments m: 0, 1, ..., 9 (0, ..., 7 for 128k option)

Returns "MSB" or "LSB"

Example
word_mem_ord? 1 (command)
WORD_MEM_ORD 1, LSB (response)

which indicates that the word order of word memory location 1 is "least significant bit first".

word_memory [m], [le], [b1], [b2]

Word Memory. Stores into word memory **m** the word pattern of length **le**, with a bit sequence represented by **b1** and **b2**.

Min. Abbr. word_memo

Arguments
m: decimal in range 0 to 9.
le: 8 or 16
b1: #00 to #FF (hexadecimal)
#Q000 to #Q377 (octal)
#B00000000 to #B11111111 (binary)

b2: same as b1. However, b2 is allowed only if le (length) is set to 16.

Example word_memory 3, 16, #HC4, #HF0

Stores the 16-bit sequence C4F0 (hex) into word memory 3.

word_memory? [m]

Word Memory Query. Returns the 8 or 16-bit pattern saved in word memory **m** in the form: [m], [byte 1], [byte 2], where m is either 8 or 16 (word length in bits), and byte 1 and byte 2 are hex representations of the first and second bytes in the pattern. Note that byte 2 will be included only if pattern length is 16.

Min. Abbr. word_memo?

Arguments m: 8 or 16

Returns <NR1>, <NR1>, <non-decimal numeric(s)>

Example
word_memory? 4 (command)
WORD_MEMORY 4, #H87, #H76 (response)

word_order [msb | lsb]

Word Order. Sets the bit order of the *current* word to MSB or LSB first.

Min. Abbr. word_o

Arguments
msb: most significant bit first
lsb: least significant bit first.

Example word_order lsb

word_order?

Word Order Query. Returns a character string (MSB or LSB) indicating the bit order of the *current* word.

Min. Abbr.	word_o?	
Response	"MSB" or "LSB"	
Example	word_order?	(command)
	WORD_ORDER LSB	(response)

GPIB and RS-232 Commands

gpib_address [v]

GPIB Address. This command sets the instrument's GPIB address to **v**. It may only be issued via the instrument's RS-232C port.

Min. Abbr. gpib_a

Arguments v: 0, 1, ..., 30.

Example gpib_address 15

gpib_address?

GPIB Address Query. This command returns a decimal number indicating the instrument's GPIB address. It may only be issued over the RS-232 port.

Min. Abbr. gpib_a?

Returns <NR1>

Example gpib_address? (command)
GPIB_ADDRESS 15 (response)

gpib_bus [off_bus | talk_listen]

GPIB Bus Mode. This command sets the instrument's gpib bus mode. It may be used only over the RS-232C port.

Min. Abbr. gpib_b

Arguments

off_bus: puts instrument in the gpib off-bus mode. In this mode it will not communicate over the GPIB.

talk_listen puts the instrument on-bus as a talker/listener.

Example gpib_bus talk_listen

gpib_bus?

GPIB Bus Mode Query. Returns a character string indicating the current GPIB bus mode. May be used only over the RS-232 port .

Min. Abbr.	gpib_b?	
Returns	[off_bus | talk_listen]	
Example	gpib_bus?	(command)
	GPIB_BUS TALK_LISTEN	(response)

rs_echo [on|off]

RS-232C Echo. Enables or disables character echo on the RS-232C (serial) port.

Min. Abbr.	rs_e
Arguments	on: instrument will echo back each character received. off: instrument will **not** echo received characters.
Example	rs_echo on

rs_echo?

RS-232C Echo Query. Returns a character string indicating whether RS-232C port echo is enabled (ON) or disabled (OFF).

Min. Abbr.	rs_e?	
Returns	[on | off]	
Example	rs_echo?	(command)
	RS_ECHO OFF	(response)

rs_pmt_lf [on|off]

RS-232C Prompt Line Feed. This command may be used to add the current RS-232C end of line (EOL) terminator, that is CR, LF, CR+LF, or LF+CR, to the end of the prompt. This feature may be useful when operating the instrument under program control via a serial (RS-232) link.

Min. Abbr.	rs_pm
Arguments	on: EOL terminator added to end of prompt off: no terminator added to prompt.

Example rs_pmt_lf on

rs_pmt_lf?

RS-232C Prompt Line Feed Query. Returns a character string indicating whether RS-232C prompt line feed is enabled (on) or disabled (off).

Min. Abbr. rs_pm

Returns [on|off]

Example rs_pmt_lf?
RS_PMT_LF ON

rs_prompt [s]

RS-232C Prompt. This command sets the prompt on the RS-232C port to the character string contained in the quoted string **s**. This string will appear at the start of each new line on a terminal display.

Min. Abbr. rs_pr

Arguments s: <qstring>, a character string inside double quotes

Example rs_prompt "gB-700 >" (command)
will change the prompt to:
gB-700 >

☑ **NOTE**: This command may be issued with a null string ("") argument to disable the RS-232C prompt.

rs_xon_xoff [on|off]

RS-232C XON/XOFF. This command enables or disables XON/XOFF flow control on the RS-232C port.

Min. Abbr. rs_x

Arguments on: enables XON/XOFF flow control
off: disables XON/XOFF flow control

Example rs_xon_xoff on

rs_xon_xoff?

RS-232C Xon/Xoff Query. This command returns a character string indicating whether RS-232C port Xon/Xoff flow control is enabled or disabled.

Min. Abbr.	rs_x?	
Returns	[on | off]	
Example	rs_xon_xoff? RS_XON_XOFF ON	(command) (response)

Misc. Shared Commands

all_mem?

All Memory (Generator). Returns a character string indicating the current Generator clock source (INT or EXT), the contents of all 10 Generator frequency memories, and the contents of all 10 Generator word memories.

Min. Abbr. all_?

Returns <string>
<NR1>, <NR3>
<NR1>, <NR1>, <Non-decimal numerics>

Example

```
all_mem?                                    (command)
CLOCK_SOURCE INT;                           (response)
CLOCK_MEMORY 0, 500.000E+6;
CLOCK_MEMORY 1, 550.000E+6;
...
CLOCK_MEM 9, 700.000E+6;
WORD_MEMORY 0, 16, #HAA, #HBB;
WORD_MEMORY 1, 8, #HF0;
...
WORD_MEMORY 9, 16, #HFF, #H00
```

All Memory (Analyzer). Returns the contents of all 10 Analyzer word memories.

Returns <NR1>, <NR1>, <Non-decimal numerics>

Example

```
all_mem?                                    (command)
WORD_MEMORY 0, 8, #HFF;                     (response)
WORD_MEMORY 1, 16, #HAA, #H00;
....
WORD_MEMORY 9, 8, #H00
```

☑ **NOTE**: When the 128K Option is installed, the All_mem command will **not** return the contents of Analyzer or Generator word memories.

header [on | off]

Header. Tells the instrument whether or not to include headers (command names) in responses.

Min. Abbr. he

Arguments
on: include headers
off: do not include headers

Example header on

header?

Header Query. Returns a character string indicating the instrument's header status.

Min. Abbr. he?

Returns [on | off]

Example
header? (command)
HEADER ON (response)

logo?

Logo Query. Returns a character string showing the Generator or Analyzer "logo" including company name, BERT model number, Generator or Analyzer identifier, and software version number. This command may be used only on the RS-232C port. Use the *idn? query to get this same information over the GPIB port.

Min. Abbr. l?

Returns **** TEKTRONIX BERT-700 [RX | TX] Vs.ss mm/yy
where:

RX indicates Analyzer
TX indicates Generator
Vs.ss = software version number (e.g. V3.00)
mm/yy = software revision month and year.

Example
logo?
**** TEKTRONIX BERT-700 RX V3.00 10/93

options?

Options Query. Returns a character string listing all of the options installed in the instrument, or returns the character string NONE indicating that no options are installed.

Min. Abbr. op?

Returns <string> , <string> , etc. where possible strings are:
128K Indicates 128K Option installed
PROM Indicates PROM Option installed
75 OHM Indicates 75 ohm Option installed
NONE Indicates no options are installed.

Examples

options?	(command)
OPTIONS NONE	(response)
options?	(command)
OPTIONS 128K , PROM , 75 OHM	(response)
options?	(command)
OPTIONS 128K	(response)

view_angle [v]

View Angle. This command sets the LCD display viewing angle.

Min. Abbr. v

Arguments v <NR1>, may equal 0 (lowest), 1, 2, or 3.

Example view_angle 2

view_angle?

View Angle Query. Returns a decimal number indicating the current LCD display view angle setup.

Min. Abbr. v?

Returns <NR1>

Example
view_angle?
VIEW_ANGLE 2

Generator Commands

The following commands are found only in the Generator command set.

Clock Source and Frequency Setup Commands

clock_freq [v]

Clock Frequency. Sets the clock frequency to a value [v], specified in Hz, over the range of 150 kHz to 705 MHz, in steps of 1 kHz.

Min. Abbr.	clock_f	
Arguments	v	<NR3>, in the range 0.150E+6 to 705.000E+6 in steps of 0.001E+6.
Example	clock_freq 622.000E+6.	

clock_freq?

Clock Frequency Query. Returns the current Generator clock frequency setting.

Min. Abbr.	clock_f	
Returns	<NR3>	
Example	clock_freq?	(command)
	CLOCK_FREQ 0.150E+6	(response)

clock_memory [m], [f]

Clock Memory. Sets the frequency saved at frequency memory location [m] to a specified value [f], in the range 150 kHz to 705 MHz.

Min. Abbr.	clock_m	
Arguments	m:	<NR1>, in the range 0, 1, ..., 9
	f:	<NR3>, in the range 0.150E+6 to 705.000E+6.
Example	clock_memory 9, 100.000E+6	

clock_memory? [m]

Clock Memory Query. Returns the frequency saved at frequency memory location [m].

Min. Abbr. clock_m?

Returns <NR1>, <NR3>

Example clock_memory? 4 (command)
CLOCK_MEMORY 4, 100.000E+6 (response)

clock_source [int|ext]

Clock Source. Sets the clock mode of the Generator to either internal (int) or external (ext).

Min. Abbr. clock_so

Arguments int Selects the internal clock source
ext Selects the external clock source.

Example clock_source int

clock_source?

Clock Source Query. Returns a character string indicating the current Generator clock mode.

Min. Abbr. clock_so?

Returns [int|ext]

Example clock_source?
(command)
CLOCK_SOURCE INT (response)

clock_step [v]

Clock Step. Sets the clock frequency increment/decrement default step size to 1 kHz, 10 kHz, 100 kHz, 1 MHz, 10 MHz, or 100 MHz.

Min. Abbr. clock_ste

Arguments v: <NR3>, in the range: 0.001E+6, 0.010E+6, 0.100E+6,
1.000E+6, 10.000E+6, or 100.000E+6

Example clock_step 1.000E+6

clock_step?

Clock Step Query. Returns the current clock frequency step size.

Min. Abbr.	clock_ste?	
Returns	<NR3>	
Example	clock_step?	(command)
	CLOCK_STEP 1.000E+6	(response)

clock_stp_up and clock_stp_dn

Clock Step Up, Clock Step Down. This command pair is used to increment or decrement the current Generator frequency using the step size previously defined with the **clock_step** command.

Min. Abbr.	clock_stp_u clock_stp_d
Arguments	none
Example	clock_step_up clock_step_dn

clock_stp_up [v] and clock_stp_dn [v]

Clock Step Up, Clock Step Down. This command pair is used to increment or decrement the current clock frequency by v, which can range from 1 kHz to 704.850 MHz in steps of 1 kHz.

Min. Abbr.	clock_stp_u clock_stp_d
Arguments	v: <NR3>, in the range 0.001E+6 to 704.850E+6.
Example	clock_step_up 0.100E+6 clock_step_dn 0.100E+6

clock_term [gnd|neg_2V]

(External) Clock Termination. Sets the termination of the External Clock input to either 50 ohms to ground or 50 ohms to -2.0 volts.

Min. Abbr.	clock_t	
Arguments	gnd:	50 ohms to ground
	neg_2V	50 ohms to - 2.00 volts.
Example	clock_term gnd	

clock_term?

(External) Clock Termination Query. Returns a character string indicating the current termination setup of the Generator's external clock input.

Min. Abbr.	clock_t?	
Returns	[gnd|neg_2V]	
Example	clock_term?	(command)
	CLOCK_TERM GND	(response)

recall_freq [m]

Recall Frequency. This command recalls a previously saved frequency from memory location [m]. The recalled frequency becomes the current frequency of the Generator internal clock.

Min. Abbr.	recall_f	
Arguments	m:	<NR1>, in the range 0, 1, ..., 9.
Example	recall_freq 5	

save_freq [m]

Save Frequency. This command saves the current Generator internal clock frequency to memory location [m],

Min. Abbr.	save_f	
Arguments	m:	<NR1>, in the range 0, 1, ..., 9.
Example	save_freq 8	

Output (Clock and Data) Setup Commands

amplitude [v]

Amplitude. This command sets both Data and Clock amplitudes to the same voltage [v].

Min. Abbr. am

Arguments v: <NR2>, in the range 0.50 to 2.00 in steps of 0.05.

Example amplitude 1.50

amplitude?

Amplitude Query. Returns two message units, the first indicating the clock amplitude setting and the second indicating the data amplitude setting.

Min. Abbr. am?

Returns <NR2>, <NR2>

Example amplitude?
(command)
CLOCK_AMPL 1.450; DATA_AMPL 1.450
(response)

clock_amp_up and clock_amp_dn

Clock Amplitude Up/Down (Default). This command pair is used to increment or decrement the current clock amplitude setting by the default increment of 0.05 volts.

Min. Abbr. clock_amp_u
clock_amp_d

Arguments none

Example clock_amp_up
clock_amp_dn

clock_amp_up [v] and clock_amp_dn [v]

Clock Amplitude Up/Down. This command pair is used to increment or decrement the current clock amplitude by specified amount of [v] volts.

Min. Abbr. clock_amp_u
clock_amp_d

Arguments v: <NR2>, in range 0.05 to 1.50 in steps of 0.05.

Example clock_amp_up 0.05
clock_amp_dn 0.05.

clock_ampl [v]

Clock Amplitude. This command sets the output clock amplitude to [v] volts.

Min. Abbr. clock_ampl

Arguments v <NR2>, in the range 0.50 to 2.00 in steps of 0.05

Example clock_amplitude 2.00

clock_ampl?

Clock Amplitude Query. Returns the current clock amplitude setting.

Min. Abbr. clock_ampl?

Response: <NR2>

Example: clock_ampl? (command)
CLOCK_AMPL 1.40

clock_off_up and clock_off_dn

Clock Offset Up, Clock Offset Down (Default). This command pair is used to increment or decrement the current output clock signal baseline offset by a default value of 0.05 volts.

Min. Abbr. clock_off_u
clock_off_d

Arguments none

Examples clock_off_up
clock_off_dn

clock_off_up [v] and clock_off_dn [v]

Clock Offset Up, Clock Offset Down. This command pair is used to increment or decrement the current output clock signal baseline offset by a specified amount [v] volts.

Min. Abbr. clock_off_u
clock_off_d

Arguments v: <NR2>, in the range 0.05 to 3.80.

Example clock_off_up 0.10
clock_off_dn 0.10

clock_offset [v]

Clock Offset. Sets the baseline offset of the output clock signal to [v] volts.

Min. Abbr. clock_offs

Arguments v: <NR2>, in the range -2.00 to 1.80 in steps of 0.05.

Example clock_offset -0.75

clock_offset?

Clock Offset Query. Returns the current value of the output clock signal baseline offset.

Min. Abbr. clock_offs?

Returns <NR2>

Example clock_offset? (command)
CLOCK_OFFSET -0.75 (response)

data_amp_up and data_amp_dn

Data Amplitude Up/Down (Default). This command pair is used to increment or decrement the current amplitude of the Generator data output by a default amount of 0.05 volts.

Min. Abbr. data_amp_u
data_amp_d

Arguments none

Example data_amp_dn

data_amp_up [v] and data_amp_dn [v]

Data Amplitude Up, Data Amplitude Down. This command pair is used to increment or decrement the current amplitude of the Generator data output by a specified step size of [v] volts.

Min. Abbr. data_amp_u
data_amp_d

Arguments v: <NR2>, in the range 0.05 to 1.50, in steps of 0.05.

Example data_amp_up 1.00

data_ampl [v]

Data Amplitude. Sets the amplitude of the Generator's data output signal to [v] volts.

Min. Abbr. data_ampl

Arguments v: <NR2>, in the range 0.50 to 2.00 in steps of 0.05.

Example data_ampl 1.00

data_ampl?

Data Amplitude Query. Returns the current amplitude setup of the Generator's data output signal.

Min. Abbr. data_ampl?

Returns <NR2>

Example	data_ampl?	(command)
	DATA_AMPL 1.00	(response)

data_off_up and data_off_dn

Data Offset Up/Down (Default). This command pair is used to increment or decrement the current baseline offset of the Generator data output by a default amount of 0.05 volts.

Min. Abbr. data_off_u
data_off_d

Arguments none

Example data_off_up

data_off_up [v] and data_off_dn [v]

Data Offset Up, Data Offset Down. This command pair is used to increment or decrement the current baseline offset of the Generator data output by a specified step size of [v] volts.

Min. Abbr. data_off_u
data_off_d

Arguments v: <NR2>, in the range 0.05 to 3.80, in steps of 0.05.

Example data_off_up 0.20

data_offset [v]

Data Offset. Sets the baseline offset of the Generator data output to a specified value of [v] volts.

Min. Abbr. data_offs

Arguments v: <NR2>, in the range -2.00 to 1.80 in steps of 0.05.

Example data_offset -0.50

data_offset?

Data Offset Query. Returns the current baseline offset of the Generator data output in terms of volts.

Min. Abbr.	data_offs?	
Returns	<NR2>	
Example	data_offset?	(command)
	DATA_OFFSET -0.50	(response)

offset [v]

Offset. This command sets the Generator clock and data baseline offset to the same specified value of [v] volts.

Min. Abbr.	off
Arguments	v: <NR2>, in the range -2.00 to 1.80 in steps of 0.05.
Example	offset 1.50

offset?

Offset Query. Returns two message units, the first containing the Generator **clock** output baseline offset and the second containing the Generator **data** output baseline offset.

Min. Abbr.	off	
Returns	<NR2>, <NR2>	
Example	offset?	(command)
	CLOCK_OFFSET 1.500	(response)
	DATA_OFFSET 1.500	

Error Injection Commands

error_rate [off|ext|rate_3|rate_4|rate_5|rate_6|rate_7]

Error Rate. Sets the Generator output bit error injection rate to "off", "external", or one of the following specified values: 10^{-3}, 10^{-4}, 10^{-5}, 10^{-6}, or 10^{-7}.

Min. Abbr.	error_r	
Arguments	off:	turns error injection off.
	ext:	selects the external error injection mode.
	rate_3	sets bit error injection rate to 10^{-3}.
	rate_4	sets bit error injection rate to 10^{-4}.
	rate_5	sets bit error injection rate to 10^{-5}.
	rate_6	sets bit error injection rate to 10^{-6}.
	rate_7	sets bit error injection rate to 10^{-7}.
Example	error_rate rate_6	

error_rate?

Error Rate Query. Returns a character string indicating the current Generator output error injection mode and rate.

Min. Abbr.	error_r?	
Returns	[off|ext|rate_3|rate_4|rate_5|rate_6|rate_7]	
Example	error_rate?	(command)
	ERROR_RATE RATE_6	(response)

error_single

Error Single. This command injects a single bit error into the Generator output signal.

Min. Abbr.	error_s
Arguments	none
Example	error_single

Analyzer Commands

The following commands are found only in the Analyzer command set.

Results Retrieve Commands

Analyzer results commands are used to query the Analyzer for Test, Window, and Totalize interval results. Note that Analyzer numeric results are returned in one three basic formats:.

- <NR1> or integer results, which include various counts such as bits or bit errors, up to a maximum of 16 digits. Examples: 0, 1, 15, 45959, 1234567890123456. Note that at a bit rate of 700 Mb/s, 16 digits can represent a bit count equivalent to over 165 days.
- <NR2> or "real number without exponent" results, such as percentages. Examples: 100.00. 99.99, 0.01, 0.00, 50.00, 27.83.
- <NR3> or "real numbers with exponent" results, such as BER, have three significant digits, with two places to the right of the decimal place, and a signed exponent following the letter "E". Examples: 1.00E-9, 9.99E-7, 2.08E-14.

☑ **NOTE**: *Returning Current or Previous Test Results.* In response to queries for test interval results, the Analyzer will return results from the current interval (so far), or from the previous interval, based on the following rules:

1. If the TEST PREV has been set to CURRENT and a test is in progress, then the instrument will return results from the *current* test interval. A test is in progress after TEST STATE is set to RUN, until the controller (or user) sets TEST STATE to STOP, or the instrument automatically stops a test at the end of a timed test interval.
2. If TEST PREV has been set to PREVIOUS and there are previous results available, then the instrument will return results from the *previous* test interval. Previous results become available after TEST STATE has made at least one RUN to STOP transition.
3. Otherwise, the Analyzer will not return results but instead will set the EXE bit (bit 4) of the Standard Event Status Register (SESR).

clock_freq?

Clock Frequency. Returns the CLOCK input frequency in Hz that is measured by the Analyzer.

Min. Abbr.	clock_f	
Returns	<NR3>, in format ddd.ddE+6	
Example	clock_freq?	(command)
	CLOCK_FREQ 700.00E+6	(response)

res_bits?

Results Bits Query. This command returns the number of bits counted, either in the current interval so far or the previous test interval, depending on the setup of TEST PREV and the current test state. (See **NOTE**: *Returning Current or Previous Test Results* on page 8-44).

Min. Abbr.	res_b?	
Returns	<NR1>	
Example	res_bits	(command)
	RES BITS 4230452921	(response)

res_cur_rate?

Results Current Rate Query. This command returns the BER measured, either in the most recent second of the current test interval or the last second of the previous test interval, depending on the setup of TEST PREV and the current test state. (See **NOTE**: *Returning Current or Previous Test Results* on page 8-44).

Min. Abbr.	res_c?	
Returns	<NR3>	
Example	res_cur_rate?	(command)
	RES_CUR_RATE 1.00E-6	(response)

res_dm?

Results Degraded Minutes Query. This command returns the number of degraded minutes counted, either in the current interval so far or in the previous test interval, depending on the setup of TEST PREV and the current test state. (See **NOTE**: *Returning Current or Previous Test Results* on page 8-44).

Min. Abbr.	res_dm?	
Returns	<NR1>	
Example	res_dm?	(command)
	RES_DM 12	(response)

res_dm_per?

Results Degraded Minutes Query. This command returns the percentage of degraded minutes calculated, either in the current test interval so far or in the previous test interval, depending on the setup of TEST PREV and the current test state. (See **NOTE**: *Returning Current or Previous Test Results* on page 8-44).

Min. Abbr.	res_dm_?	
Returns	<NR2>	
Example	res_dm_per?	(command)
	RES_DM_PER 20.20	(response)

res_efs?

Results Error-Free Seconds. This command returns the number of error free seconds counted, either in the current test interval so far or in the previous test interval, depending on the setup of TEST PREV and the current test state. (See **NOTE**: *Returning Current or Previous Test Results* on page 8-44).

Min. Abbr.	res_efs?	
Returns	<NR1>	
Example	res_efs?	(command)
	RES_EFS 273	(response)

res_efs_per?

Results Error-Free Seconds. This command returns the percentage of error free seconds calculated, either in the current test interval so far or in the previous test interval, depending on the setup of TEST PREV and the current test state. (See **NOTE**: *Returning Current or Previous Test Results* on page 8-44).

Min. Abbr.	res_efs_?	
Returns	<NR2>	
Example	res_efs_per?	(command)
	RES_EFS_PER 100.00	(response)

res_elapsed?

Results Elapsed (Time). This command returns a quoted string indicating the time elapsed, either in the current interval so far or the previous interval, depending on the setup of TEST PREV and the current test state. (See **NOTE**: *Returning Current or Previous Test Results* on page 8-44).

Min. Abbr.	res_el?	
Returns	<qstring>, in format "ddd-hh:mm:ss", where ddd = days, hh = hours, mm = minutes, and ss = seconds.	
Example	res_elapsed?	(command)
	RES_ELAPSED "000-23:52:30"	(response)

res_errors?

Results Errors. This command returns the number of bit errors counted, either in the current test interval so far or in the previous test interval, depending on the setup of TEST PREV and the current test state. (See **NOTE**: *Returning Current or Previous Test Results* on page 8-44).

Min. Abbr.	res_er?	
Returns	<NR1>	
Example	res_errors?	(command)
	RES_ERRORS 81252873	(response)

res_es?

Results Errored Seconds. This command returns the number of errored seconds counted, either in the current test interval so far or in the previous test interval, depending on the setup of TEST PREV and the current test state. (See **NOTE**: *Returning Current or Previous Test Results* on page 8-44).

Min. Abbr.	res_es?	
Returns	<NR1>	
Example	res_es?	(command)
	RES_ES 384	(response)

res_es_per?

Results Error-Free Seconds Percentage. This command returns the percentage of errored seconds calculated, either in the current test interval so far or in the previous test interval, depending on the setup of TEST PREV and the current test state. (See **NOTE**: *Returning Current or Previous Test Results* on page 8-44).

Min. Abbr.	res_es_?	
Returns	<NR2>	
Example	res_es_per?	(command)
	RES_ES_PER 89.35	(response)

res_los?

Results Loss of Signal Seconds. This command returns the number of seconds counted, that contained a loss of signal event, either in the current test interval so far or in the previous test interval, depending on the setup of TEST PREV and the current test state. (See **NOTE**: *Returning Current or Previous Test Results* on page 8-44).

Min. Abbr.	res_l?	
Returns	<NR1>	
Example	res_los?	(command)
	RES_LOS 1	(response)

res_pha_es?

Results Phase Errored Seconds. This command returns the number of phase errored seconds counted, either in the current test interval so far or in the previous test interval, depending on the setup of TEST PREV and the current test state. (See **NOTE**: *Returning Current or Previous Test Results* on page 8-44).

Min. Abbr.	res_p?	
Returns	<NR1>	
Example	res_pha_es?	(command)
	RES_PHA_ES 591	(response)

res_ses?

Results Severely Errored Seconds. This command returns the number of severely errored seconds counted, either in the current test interval so far or in the previous test interval, depending on the setup of TEST PREV and the current test state. (See **NOTE**: *Returning Current or Previous Test Results* on page 8-44).

Min. Abbr.	res_ses?	
Returns	<NR1>	
Example	res_ses?	(command)
	RES_SES 1290121	(response)

res_ses_per?

Results Severely Errored Seconds Percentage. This command returns the percentage of severely errored seconds counted, either in the current test interval so far or in the previous test interval, depending on the setup of TEST PREV and the current test state. (See **NOTE**: *Returning Current or Previous Test Results* on page 8-44).

Min. Abbr.	res_ses_?	
Returns	<NR2>	
Example	res_ses_per?	(command)
	RES_SES_PER 27.70	(response)

res_start?

Results Start (Time). This command returns a quoted string indicating the start time, either of the current test interval or the previous test interval, depending on the setup of TEST PREV and the current test state. (See **NOTE**: *Returning Current or Previous Test Results* on page 8-44).

Min. Abbr. res_sta?

Returns <qstring>, <qstring> in the format: "**dd/mmm/yy**", "**hh:mm:ss.th**" where yy = year, mmm = month (JAN, FEB, ..., DEC), dd = day, hh = hours, mm = minutes, ss = seconds, th = tenths and hundreds of seconds.

Example
res_start? (command)
RES_START "20/DEC/93, "14:00:00.00" (response)

res_stop?

Results Stop (Time). Returns a quoted string indicating the stop time of the previous test interval. This command will produce a return if and only if previous results are available. Previous results become available after TEST STATE has made at least one RUN to STOP transition.

Min. Abbr. res_sto?

Returns <qstring>, <qstring> in the format: "**dd/mmm/yy**", "**hh:mm:ss.th**" where yy = year, mmm = month (JAN, FEB, ..., DEC), dd = day, hh = hours, mm = minutes, ss = seconds, th = tenths and hundreds of seconds.

Example
res_stop? (command)
RES_STOP "20/DEC/93", "14:30:00.00" (response)

res_sync?

Results Synchronization Loss Seconds. This command returns the number of seconds in which one or more pattern synchronization loss events occurred, either in the current test interval so far or in the previous test interval, depending on the setup of TEST PREV and the current test state. (See **NOTE**: *Returning Current or Previous Test Results* on page 8-44).

Min. Abbr. res_sy?

Returns <NR1>

Example	res_sync?	(command)
	RES_SYNC 23	(response)

res_tes?

Results Threshold Errored Seconds. This command returns the number of threshold errored seconds counted, either in the current test interval so far or in the previous test interval, depending on the setup of TEST PREV and the current test state. (See **NOTE**: *Returning Current or Previous Test Results* on page 8-44).

Min. Abbr.	res_tes?	
Returns	<NR1>	
Example	res_tes?	(command)
	RES_TES 9823	(response)

res_tes_per?

Results Threshold Errored Seconds Percentage. This command returns the percentage of threshold errored seconds, either in the current test interval so far or in the previous test interval, depending on the setup of TEST PREV and the current test state. (See **NOTE**: *Returning Current or Previous Test Results* on page 8-44).

Min. Abbr.	res_tes_?	
Returns	<NR2>	
Example	res_tes_per?	(command)
	RES_TES_PER 5.52	(response)

res_tot_rate?

Results Total (Bit Error) Rate. This command returns the average BER, either of the current test interval so far or of the previous test interval, depending on the setup of TEST PREV and the current test state. (See **NOTE**: *Returning Current or Previous Test Results* on page 8-44).

Min. Abbr.	res_to?	
Returns	<NR3>	
Example	res_tot_rate?	(command)
	RES_TOT_RATE 4.29E-7	(response)

res_us?

Results Unavailable Seconds. This command returns the number of unavailable seconds counted, either in the current test interval so far or in the previous test interval, depending on the setup of TEST PREV and the current test state. (See **NOTE**: *Returning Current or Previous Test Results* on page 8-44).

Min. Abbr.	res_us?	
Returns	<NR1>	
Example	res_us?	(command)
	RES_US 120	(response)

res_us_per?

Results Unavailable Seconds Percentage. This command returns the percentage of unavailable seconds, either in the current test interval so far or in the previous test interval, depending on the setup of TEST PREV and the current test state. (See **NOTE**: *Returning Current or Previous Test Results* on page 8-44).

Min. Abbr.	res_us_?	
Returns	<NR2>	
Example	res_us_per?	(command)
	RES_US_PER 29.01	(response)

total_bits?

Totalize Bits Query. Returns the number of bits accumulated in the current Totalize measurement interval. The Totalize bit count is zeroed at the start of each new Totalize measurement interval, that is at power-up and after each error reset.

Min. Abbr.	total_b?	
Returns	<NR1>	
Example	total_bits?	(command)
	TOTAL_BITS 32365018072	(response)

total_error?

Totalize Error Query. Returns the number of bit errors counted so far in the current Totalize measurement interval. The Totalize error count is zeroed at the start of each new Totalize measurement interval, that is at power-up and after a error reset.

Min. Abbr.	total_e?	
Returns	<NR1>	
Example	total_error?	(command)
	TOTAL_ERROR 20984	(response)

total_rate?

Totalize (Bit Error) Rate Query. Returns the bit error rate (BER) calculated so far in the current Totalize measurement interval. Totalize BER equals the Totalize bit error count divided by the Totalize bit count.

Min. Abbr.	total_r?	
Returns	<NR3>	
Example	total_rate?	(command)
	TOTAL_RATE 8.62E-6	(response)

total_time?

Totalize Time Query. Returns a quoted string indicating the amount of time accumulated in the current Totalize measurement interval. Totalize time is zeroed at the start of each new Totalize measurement interval, that is at power-up and after each error reset.

Min. Abbr.	total_t?	
Returns	<qstring>, in the format "ddd-hh:mm:ss" where ddd = days, hh = hours (00 ... 23), mm = minutes (00 ... 59), ss = seconds (00 ... 59)	
Example	total_time?	(command)
	"000-12:34:56"	(response)

Input Setup Commands

clock_input [single|diff]

Clock Input. Selects either singled-ended or differential operation for the clock input of the Analyzer.

Min. Abbr.	clock_i	
Arguments	**single**	single-ended operation
	diff	differential operation
Example	clock_input single	

clock_input?

Clock Input Query. Returns a character string indicating the current single-ended/differential setup of the Analyzer clock input.

Min. Abbr.	clock_i?	
Returns	[single|diff]	
Example	clock_input?	(command)
	CLOCK_INPUT SINGLE	(response)

clock_term [neg_2v | gnd | ac|pos_3v]

Clock Termination. Sets the Analyzer clock input termination.

Min. Abbr.	clock_ter	
Arguments	**neg_2v**	50 ohms to -2 volts.
	gnd	50 ohms to ground.
	ac	50 ohms via 0.01 µF capacitor to ground.
	pos_3v	50 ohms to +3 volts.
Example	clock_term gnd	

clock_term?

Clock Termination Query. Returns a character string indicating the current Analyzer clock input termination setup.

Min. Abbr.	clock_ter?	
Returns	[neg_2v | gnd | ac | pos_3v]	
Example	clock_term?	(command)
	CLOCK_TERM GND	(response)

clock_thr_up and clock_thr_dn

Clock Threshold Up/Down (Default). This command pair is used to increment (clock_thr_up) or decrement (clock_thr_dn) the current Analyzer CLOCK input threshold voltage by the default increment of 0.05 volts.

Min. Abbr.	clock_thr_u clock_thr_d
Argument	none
Example	clock_thr_up clock_thr_dn

clock_thr_up [v] and clock_thr_dn [v]

Clock Threshold Up/Down. This command pair is used to increment (clock_thr_up) or decrement (clock_thr_dn) the current CLOCK input threshold voltage by v volts.

Min. Abbr.	clock_thr_u clock_thr_d
Argument	v <NR2>, 0.05 to 6.00
Example	clock_thr_up 0.10 clock_thr_dn 0.10

clock_thres [v]

Clock Threshold. Sets the threshold voltage for the Analyzer CLOCK input to **v**, where the allowed range for **v** depends on the current input clock termination.

Min. Abbr.	clock_thre
Arguments	**v**: -3.00 to 4.50 in steps of 0.05 (see Table 5-5 for limits based on Termination)
Example	clock_thres 2.00

clock_thres?

Clock Threshold Query. Returns the current Analyzer CLOCK input threshold voltage.

Min. Abbr.	clock_thre?	
Returns	<NR2>	
Example	clock_thres?	(command)
	CLOCK_THRES 2.00	(response)

data_del_up and data_del_dn

Data Delay Up/Down (Default). This command pair is used to increment (data_del_up) or decrement (data_del_dn) the current DATA input delay by the default amount of 20 ps (0.02E-9 seconds).

Min. Abbr.	data_del_u data_del_d
Argument	none
Example	data_del_up data_del_dn

data_del_up [v] and data_del_dn [v]

Data Delay Up/Down. This command pair is used to increment (data_del_up) or decrement (data_del_dn) the current DATA input delay by **v** seconds. Note that v is expressed as a real number with an exponent and is in the range of 20 ps to 4.00 ns.

Min. Abbr.	data_del_u data_del_d
Argument	v <NR3>, 0.02E-9 to 4.00E-9, steps of 0.02E-9 (20 ps)
Example	data_del_up 0.02E-9 data_del_dn 0.10E-9

data_delay [v]

Data Delay. Sets the Analyzer DATA input delay to any value from 0.00 ns to 4.00 ns, in 0.02 ns (20 ps) steps. Note that v is expressed as a real number with an exponent of -9.

Min. Abbr.	data_dela
Argument	v: 0.00E-9 to 4.00E-9, in steps of 0.02E-9
Example	data_delay 1.62E-9

data_delay?

Data Delay Query. Returns the current value of the Analyzer DATA input delay setup parameter.

Min. Abbr.	data_dela?	
Returns	<NR3>	
Example	data_delay?	(command)
	DATA_DELAY 1.62E-9	(response)

data_input [single|diff]

Data Input. Selects either singled-ended or differential operation for the Analyzer data input.

Min. Abbr.	data_inp	
Arguments	**single**:	single-ended operation
	diff:	differential operation
Example	data_input single	

data_input?

Data Input Query. Returns a character string indicating the current single-ended/differential setup of the Analyzer data input.

Min. Abbr.	data_inp	
Returns	[SINGLE | DIFF]	
Example	data_input?	(command)
	DATA_INPUT DIFF	(response)

data_term [neg_2v | gnd | ac | pos_3v]

Data Termination. Sets the Analyzer data input termination.

Min. Abbr.	data_te	
Arguments	**neg_2v**:	50 ohms to -2 volts.
	gnd	50 ohms to ground.
	ac	50 ohms via 0.01 µF capacitor to ground.
	pos_3v	50 ohms to +3 volts.
Example	data_term ac	

data_term?

Data Termination Query. Returns a character string indicating the current Analyzer data input termination setup.

Min. Abbr.	data_te?	
Returns	[neg_2v | gnd | ac | pos_3v]	
Example	data_term?	(command)
	DATA_TERM AC	(response)

data_thr_up and data_thr_dn

Data Threshold Up/Down (Default). This pair of commands increments (data_thr_up) or decrements (data_thr_dn) the current Analyzer DATA input threshold by the default increment of 0.05 volts.

Min. Abbr.	data_thr_u data_thr_d	
Arguments	none	
Examples	data_thr_up	(increments threshold by 0.05 volts)
	data_thr_dn	(decrements threshold by 0.05 volts)

data_thr_up [v] and data_thr_dn [v]

Data Threshold Up/Down. This pair of commands increments (data_thr_up) or decrements (data_thr_dn) the current Analyzer DATA input threshold by an amount **v**.

Min. Abbr.	data_thr_u data_thr_d	
Arguments	v: 0.05 to 6.00	
Examples	data_thr_up 0.10	(increments threshold by 0.1 volt)
	data_thr_dn 2.00	(decrements threshold by 2 volts)

data_thres

Data Threshold. Sets the threshold voltage for the Analyzer DATA input to **v**, where the allowed range for **v** depends on the current DATA input termination.

Min. Abbr.	data_thre
Arguments	**v**: -3.00 to 4.50 in steps of 0.05 (see Table 5-5 for limits based on Termination)
Example	data_thres -1.50

data_thres?

Data Threshold Query. Returns the current threshold voltage for the Analyzer DATA input.

Min. Abbr.	data_thre?	
Returns	<NR2>	
Example	data_thres?	(command)
	DATA_THRES -1.50	(response)

rdata_del_up and rdata_del_dn

Reference Data Delay Up/Down (Default). This command pair is used to increment (rdata_del_up) or decrement (rdata_del_dn) the current REF DATA delay by the default increment of 0.05 volts.

Min. Abbr.	rdata_del_u rdata_del_d
Arguments	none
Examples	rdata_del_up rdata_del_dn

rdata_del_up [v] and rdata_del_dn [v]

Reference Data Delay Up/Down. This command pair is used to increment (rdata_del_up) or decrement (rdata_del_dn) the current REF DATA delay by **v**, where **v** is in <NR3> format and may be set in the range 0.02 ns to 4.00 ns.

Min. Abbr.	rdata_del_u rdata_del_d
Argument	**v**: <NR3>, 0.02E-9 to 4.00E-9 in 0.02E-9 steps.
Examples	rdata_del_up 1.00E-9
	rdata_del_dn 1.00E-9

rdata_delay [v]

Reference Data Delay. Sets the Analyzer REF DATA input delay to **v**, where v may be set in the range 0.00 ns to 4.00 ns, in 0.02 ns (20 ps) steps. v is expressed as a real number with an exponent of -9.

Min. Abbr. rdata_dela

Argument v: 0.00E-9 to 4.00E-9, in steps of 0.02E-9

Example rdata_delay 1.10E-9

rdata_delay?

Reference Data Delay Query. Returns the current Analyzer REF DATA input delay.

Min. Abbr. rdata_dela?

Returns <NR3>

Example

rdata_delay?	(command)
RDATA_DELAY 1.10E-9	(response)

rdata_term [neg_2v | gnd | ac | pos_3v]

Reference Data Termination. Sets the Analyzer REF DATA input termination.

Min. Abbr. rdata_te

Arguments

neg_2v:	50 ohms to -2 volts.
gnd	50 ohms to ground.
ac	50 ohms via 0.01 µF capacitor to ground.
pos_3v	50 ohms to +3 volts.

Example rdata_term neg_2v

rdata_term?

Reference Data Termination Query. Returns a character string indicating the current Analyzer clock input termination setup.

Min. Abbr. rdata_te?

Returns [neg_2v | gnd | ac | pos_3v]

Example	rdata_term?	(command)
	RDATA_TERM NEG_2V	(response)

rdata_thr_up and rdata_thr_dn

Reference Data Threshold Up/Down (Default). This command pair is used to increment (rdata_thr_up) or decrement (rdata_thr_dn) the current REF DATA threshold by the default increment of 0.05 volts.

Min. Abbr. rdata_thr_u
rdata_thr_d

Argument none

Examples rdata_thr_up

rdata_thr_dn

rdata_thr_up [v] and rdata_thr_dn [v]

Reference Data Threshold Up/Down. This command pair is used to increment (rdata_thr_up) or decrement (rdata_thr_dn) the current REF DATA threshold by v, where v is in <NR2> format and may be set in the range 0.05 volts to 6.00 volts.

Min. Abbr. rdata_thr_u
rdata_thr_d

Argument **v**: <NR2>, 0.05 to 6.00 volts.

Examples rdata_thr_up 0.10

rdata_thr_dn 0.50

rdata_thres [v]

Reference Data Threshold. Sets the threshold voltage for the Analyzer REF DATA input to **v**, where the allowed range for **v** depends on the current input clock termination.

Min. Abbr. rdata_thre

Arguments **v**: -3.00 to 4.50 in steps of 0.05 (see Table 5-5 for limits based on Termination)

Example rdata_thres 1.00

rdata_thres?

Reference Data Threshold Query. Returns the current threshold voltage for the Analyzer REF DATA input.

Min. Abbr.	rdata_thre	
Returns	<NR2>	
Example	rdata_thres?	(command)
	RDATA_THRES 1.00	(response)

Error Detector and History Setup Commands

auto_search [auto | off | disab]

Auto_Search. Enables or disables the Auto Search and Automatic pattern re-alignment functions.

Min. Abbr.	auto_s	
Arguments	auto:	Auto Search on, pattern re-alignment enabled
	off:	Auto Search off, pattern re-alignment enabled
	disab :	Auto Search off, pattern re-alignment disabled
Example	auto_search auto	

auto_search?

Auto_Search Query. Returns a character string representing the current setup of AUTO SEARCH and automatic pattern re-alignment.

Min. Abbr.	auto_s?	
Returns	[auto | off | disable]	
Example	auto_search?	(command)
	AUTO_SEARCH AUTO	(response)

disp_select [total | window | test]

Display Select. Selects the total, window, or test display mode. The display mode determines which BER and bit error results are shown in the top-middle, and top-right fields respectively of the display.

Min. Abbr.	dis
Arguments	**total**: selects the *Totalize* display mode. **window**: selects the *Window* display mode. **test**: selects the *Test* display mode.
Example	disp_select test

disp_select?

Display Select Query. Returns a character string that indicates the current display mode of the Analyzer.

Min. Abbr.	dis?	
Returns	[total | window | test]	
Example	disp_select?	(command)
	DISP_SELECT TEST	(response)

error_reset

Error Reset. This command resets the Totalize and Window measurement processes. This does not affect Test results.

Min. Abbr.	er
Arguments	none
Example	error_reset

histry_bits?

History Bits Query. Returns a character string indicating the state of the BIT error history indicator.

Min. Abbr.	histry_b?	
Returns	[on | off]	
Example	histry_bits?	(command)
	HISTRY_BITS OFF	(response)

histry_clear

History Clear. This command clears (resets) all four Analyzer history LEDs: Sync Loss, Bit Error, Phase Error, and Power Loss.

Min. Abbr.	histry_c
Arguments	none
Example	histry_clear

histry_phase?

History Phase. Returns a character string indicating the state of the PHASE error history indicator.

Min. Abbr.	histry_ph?	
Returns	[on | off]	
Example	histry_phase?	(command)
	HISTRY_PHASE ON	(response)

histry_power?

History Power. Returns a character string indicating the state of the POWER Loss history indicator.

Min. Abbr.	histry_po?	
Returns	[on | off]	
Example	histry_power?	(command)
	HISTORY_POWER OFF	(response)

histry_stat?

History Status Query. This command returns a summary of the Analyzer's front panel status. The response will be in the form of multiple message units separated by semicolons.

Min. Abbr.	histry_st?		
Returns	Window error rate	<NR3>	
	Totalize error rate	<NR3>	
	Received clock frequency	<NR3>	
	Sync Lock status	[on | off]	
	History status indicators	[on | off]	
Example	histry_stat		(command)
	WIN_RATE 1.5E-03;		(response)
	TOTAL_RATE 3.7E-06;		
	CLOCK_FREQ 701.47E+6;		
	SYNC OFF;		
	HISTRY_SYNC ON;		
	HISTRY_BITS ON;		
	HISTRY_PHASE OFF;		
	HISTRY_POWER OFF		

histry_sync?

History Sync Indicator Query. Returns a character string indicating the state of the SYNC Loss history indicator.

Min. Abbr.	histry_sy?	
Returns	[on | off]	
Example	histry_sync?	(command)
	HISTRY_SYNC OFF	(response)

sync?

Synchronization Query. Returns a character string indicating whether the Analyzer synchronization LOCK LED is on or off. If it is on, then the Analyzer is in pattern synchronization. If it is off, then the Analyzer is out of pattern synchronization.

Min. Abbr.	sy?	
Returns	[on | off]	
Example	sync?	(command)
	SYNC ON	(response)

ttl20_reset and ttl20_error?

Totalize 20 ms Reset / Totalize 20 ms Error. These two commands are similar in function to the **error_reset** and **total_error?** commands respectively. However the two ttl20 commands are better suited to make measurements over very short measurement intervals, that is intervals less than one second.

The minimum time allowed between an error_reset and a total_error? command is 500 ms. This limit does not apply to the ttl20_reset and ttl20_error? commands which will be processed as soon as they are received. Moreover, in addition to the error count, the response to a ttl20_error? query will include the number of 20 ms intervals since receipt of the ttl20_reset command.

Min. Abbr.	ttl20_r
	ttl20_e
ttl20_reset arguments	*none*
ttl20_error? returns	[i], [e], where:

i is a decimal number in <NR1> format that equals the number of 20 ms intervals since the last ttl20_reset, in the range 0 ... 50, corresponding to a measurement interval of 0 to 1000 ms (1 second). A value at -1 indicates more than one second has gone by.

e is a decimal number in <NR1> format that equals the total number of bit errors counted since the last ttl20_reset. Note that if **i** = 50 then **e** will equal the number of errors counted in the first second after the ttl20_reset. Errors that occur more than one second after a ttl20_reset will not be included in the ttl20_error count.

Example

ttl20_reset	(command)
ttl20_errors?	(command)
TTL20 7, 349	(response indicating 349 bit errors were counted in the 7x20 ms = 140 ms between receipt of the ttl20_reset and ttl20_errors? commands.

TEST Setup Commands

test_discard

Test Discard. This command discards all results from the previous test interval, making previous results unavailable until the next test state RUN to STOP transition occurs.

Min. Abbr.	test_d
Arguments	none
Example	test_discard

test_length [t]

Test Length. This command sets the timed test interval. This interval will be in effect only when the test mode is timed or repeat.

Min. Abbr.	test_l
Arguments	t <qstring>, in format "hh:mm:ss", where hh = hours (0 to 24) mm = minutes (0 to 59), ss = seconds (0 to 59).
Example	test_length "02:00:00"

test_length?

Test Length Query. Returns the current value of the timed test length parameter.

Min. Abbr.	test_l?	
Returns	<qstring>, in format "hh:mm:ss"	
Example	test_length?	(command)
	TEST_LENGTH "02:00:00"	(response)

test_mode [untimed|timed|repeat]

Test Mode. Sets the test timing mode.

Min. Abbr. test_m

Arguments **untimed**: after test start, a test interval will continue until a test stop command is received, or the test is stopped manually from the front panel.
timed: after a test start, a test interval will stop automatically after test length has elapsed.
repeat: after test start, a test interval will stop and then restart automatically after test length has elapsed. This process will continue until a test stop command is received, or testing is stopped manually from the front panel.

Example test_mode timed

test_mode?

Test Mode Query. Returns the current Analyzer test timing mode.

Min. Abbr. test_m?

Returns [untimed|timed|repeat]

Example test_mode?
TEST_MODE TIMED

test_prev [current|previous]

Test Previous. Sets test_prev parameter to "current" or "previous". This parameter determines whether responses to results query commands will be based on the current interval or the previous interval. (See note on **NOTE**: *Returning Current or Previous Test Results*, page 8-44).

Min. Abbr. test_pre

Arguments **current**: return results from the current test interval
previous: return results from the previous test interval

Example test_prev current

test_prev?

Test Previous Query. Returns the current state of the test_prev command.

Min. Abbr.	test_pre?	
Returns	[current|previous]	
Example	test_prev?	(command)
	TEST_PREV CURRENT	(response)

test_print

Test Print. This command causes the Analyzer to print a Test Summary report. This report has the same basic format and contents as an End-of-Test report. If a test is in progress, the report will be based on current interval results. If no test is in progress, then the report will be based on results from the previous interval.

Min. Abbr.	test_pri
Arguments	none
Example	test_print

test_report [eot|on_error|both|none]

Test Report. This command enables or disables End of Test and On Error reports.

Min. Abbr.	test_r	
Arguments	**eot**:	End-of-Test reports are enabled.
	on_error:	On-Error reports are enabled.
	both:	Both End-of-Test and On-Error reports are enabled
	none:	Neither End-of-Test nor On-Error reports are enabled.
Example	test_report both	

test_report?

Test Report Query. Returns a character string indicating the current setup of the test report parameter.

Min. Abbr. test_r

Returns [eot|on_error|both|none]

Example
test_report? (command)
TEST_REPORT BOTH (response)

test_squelch [on|off]

Test Squelch. Enables or disables squelching of On-Error reports.

Min. Abbr. test_sq

Arguments
on: On-Error reports will be squelched after 10 consecutive reports, that is 10 consecutive seconds in which BER is above the Test Error Rate threshold. On-Error reports will then be automatically unsquelched after five consecutive seconds in which BER is not above the Test Error Rate threshold.
off: On-Error report squelching is disabled.

Example test_squelch on

test_squelch?

Test Squelch Query. Returns a character string indicating the current setup of the test squelch parameter.

Min. Abbr. test_sq?

Returns [on|off]

Example
test_squelch? (command)
TEST_SQUELCH ON (response)

test_state [run|stop]

Test State. This command is used to start or stop the test measurement process.

Min. Abbr. test_st

Arguments **run**: starts the test measurement process. Will initiate an untimed, timed, or repeat test depending on the setup of test mode.
stop: Stops the test measurement process. Will terminate untimed or repeat tests. Will also prematurely end timed tests before "test length" has elapsed.

Example test_state run

test_state?

Test State Query. Returns a character string indicating the current state of the test process. A response of RUN indicates that a test is in progress. A response of STOP indicates that no test is in progress.

Min. Abbr. test_st

Returns [run|stop]

Example

test_state?	(command)
TEST_STATE RUN	(response)

test_thres [v]

Test Threshold. Used to set the test error rate threshold to the value: 1 x 10^{-v}. This threshold determines which seconds are counted as Threshold Errored Seconds (TES). It also determines when On-Error reports are generated.

Min. Abbr. test_t

Arguments v <NR1>, in the range 2, 3, ..., 16. That is the test error rate threshold may be set in the range 10^{-2} to 10^{-16}.

Example test_thres 12

test_thres?

Test Threshold Query. Returns the value v, indicating that the current test error rate threshold is set to 1 x 10^{-v}.

Min. Abbr. test_t?

Returns <NR1>

Example test_thres? (command)
TEST_THRES 12 (response)
indicating that the test error rate threshold is set to 1 x 10^{-12}.

WINDOW Setup Commands

win_bit_len [v]

Windows Bit Length. Sets windows bit length parameter to 1 x 10^{v} bits. This parameter determines window length when WIN_MODE is set to BITS.

Min. Abbr.	win_bit_	
Arguments	v	<NR1>, in the range 8, 9, ..., 16.
Example	win_bit_len 15	

win_bit_len?

Windows Bit Length Query. Returns the value v, indicating that the windows bit length parameter is set to 1 x 10^{v} bits.

Min. Abbr.	win_bit_?	
Returns	<NR1>	
Example	win_bit_len?	(command)
	WIN_BIT_LEN 15	(response)

win_bits?

Window Bits. Returns the number of bits received so far in the window interval.

Min. Abbr.	win_bits?	
Returns	<NR1>	
Example	win_bits?	(command)
	WIN_BITS 49098302	(response)

win_error?

Windows Errors. Returns the number of bit errors counted so far in the window interval.

Min. Abbr.	win_e
Returns	<NR1>

Example	win_error?	(command)
	WIN_ERROR 27	(response)

win_mode [bits|sec]

Windows Mode. Determines whether window length is determined by the windows bits length parameter or the windows seconds length parameter.

Min. Abbr.	win_m	
Arguments	bits:	selects the windows bits length parameter
	sec:	selects the windows seconds length parameter.
Example	win_mode bits	

win_mode?

Windows Mode Query. Returns the current windows length mode.

Min. Abbr.	win_m	
Returns	[bits|sec]	
Example	win_mode?	(command)
	WIN_MODE BITS	(response)

win_prev [current|previous]

Window Previous. Sets the WIN_PREV parameter to current or previous. This parameter determines whether Analyzer responses to win_bits?, win_error?, win_rate?, and win_time? queries will be based on the current window interval or the previous window interval.

Min. Abbr.	win_p	
Arguments	current	selects the current window interval
	previous	selects the previous window interval
Example	win_prev current	

win_prev?

Window Previous Query. Returns the current value of the WIN_PREV parameter.

Min. Abbr.	win_p
Returns	[current|previous]

Example	win_prev?	(command)
	WIN_PREV CURRENT	(response)

win_rate?

Window Rate Query. Returns the BER measured in either the current window interval so far, or the previous window interval, depending on the setup of WIN_PREV.

Min. Abbr. win_ra?

Returns <NR3>

Example

win_report [on|off]

Windows Report. This command enables or disables End-of-Window reports.

Min. Abbr. win_re

Arguments
- on enables End-of-Window reports.
- off disables End-of-Window reports.

Example win_report on

win_report?

Windows Report Query. Returns a character string indicating whether End-of-Windows reports are enabled (on) or disabled (off).

Min. Abbr. win_re?

Returns [on|off]

Example	win_report?	(command)
	WIN_REPORT ON	(response)

win_sec_len [s]

Windows Seconds Length. Sets the windows seconds length parameter to the duration indicated by the quoted string **s**.

Min. Abbr. win_s

Arguments
- s <qstring>, in format "hh:mm:ss", where hh = hours (00 to 23), mm = minutes (00 to 59), and ss = seconds (00 to 59).

Example win_sec_len 00:30:00

win_sec_len?

Windows Seconds Length Query. Returns a quoted string indicating the value of the windows seconds length parameter.

Min. Abbr. win_s?

Returns <qstring>

Example
win_sec_len? (command)
WIN_SEC_LEN "00:30:00" (response)

win_time?

Windows Time Query. Returns either the elapsed time in the current window so far, or the duration of the previous window, depending on the setup of the WIN_PREV parameter.

Min. Abbr. win_t?

Returns <qstring>, in the format "ddd-hh-mm-ss", where ddd = days (0 to 999), hh = hours (0 to 23), mm = minutes (0 to 59), and ss = seconds (0 to 59).

Example
win_time? (command)
WIN_TIME "000-01:00:00" (response)

PRINT Setup Commands

print_enable [on|off]

Print Enable. This command turns the "master" Analyzer Print Enable parameter on or off. When Print Enable is off, then no reports will be printed. When Print Enable is on, then all enabled reports will be printed. Remember that individual reports will not print unless they are enabled individually and Print Enable has been set to "on".

Min. Abbr.	print_e	
Arguments	on	enabled reports will print.
	off	no reports will print
Example	print_enable on	

print_enable?

Print Enable Query. Returns the current state of the Print Enable parameter.

Min. Abbr.	print_e?	
Returns	[on|off]	
Example	print_enable?	(command)
	PRINT_ENABLE ON	(response)

print_port [parallel | gpib | serial]

Print Port. This command selects the port on which all Analyzer reports will be printed.

Min. Abbr.	print_p	
Arguments	parallel	selects the rear-panel "PRINTER" port
	gpib	selects the rear-panel "GPIB" port.
	serial	selects the rear-panel "RS-232C" port.
Example	print_port parallel	

print_port?

Print Port Query. Returns the currently selected printer port.

Min. Abbr.	print_p?	
Returns	[parallel | gpib | serial]	
Example	print_port?	(command)
	PRINT_PORT PARALLEL	(response)

print_string ["s"]

Print String. This command prints a character string **s** to the currently selected printer port.

Min. Abbr.	print_s
Arguments	"s" a character string enclosed in quotes.
Example	print_string "This is a test"

Audio Beeper Setup Commands

audio_rat_up and audio_rat_dn

Audio Rate Up/Down (Default). This command pair is used to increment (audio_rat_up) or decrement (audio_rat_dn) by one the exponent of the current error beeper BER threshold.

Min. Abbr. audio_rat_u
audio_rat_d

Arguments none

Example audio_rat_up

This command adds one to the exponent of the beeper BER threshold.

audio_rat_up [v] and audio_rat_dn [v]

Audio Rate Up/Down. This command pair is used to increment (audio_rat_up) or decrement (audio_rat_dn) the exponent of the error beeper BER threshold by an amount **v**. Note that because the exponent is negative, the audio_rat_up command decreases the BER threshold while audio_rat_dn increases the threshold.

Min. Abbr. audio_rat_u
audio_rat_d

Arguments **v**: 1, 2, 3, ..., 14.

Example audio_rat_up 9

The above example adds 9 to the exponent, for example changing the audio rate threshold from 1 x 10^{-3} to 1 x 10^{-12}.

audio_rate [v]

Audio Rate. Sets the BER threshold for the error beeper to 1 x $10^{-\mathbf{v}}$.

Min. Abbr. audio_rate

Arguments **v**: 2, 3, ..., 14.

Example audio_rate 9

audio_rate?

Audio Rate Query. Returns the current error beeper BER threshold.

Returns	<NR1>	
Example	audio_rate?	(command)
	AUDIO_RATE 9	(response)

audio_vol [v]

Audio Volume. Sets the volume of the error beeper to **v**, where v can range from 0 (off) to 4 (maximum volume).

Min. Abbr.	audio_vol
Arguments	v: 0, 1, 2, 3, or 4
Example	audio_vol 4

audio_vol?

Audio Volume Query. Returns a decimal number in the range 0, 1, 2, 3, or 4, that represents the current error beeper .

Min. Abbr.	audio_vol?	
Returns	<NR1>	
Example	audio_vol?	(command)
	AUDIO_VOL 4	(response)

audio_vol_up and audio_vol_dn

Audio Volume Up/Down (Default). This command pair is used to increment (audio_vol_up) or decrement (audio_vol_dn) the current error beeper volume by one level.

Min. Abbr.	audio_vol_u audio_vol_d
Argument	none
Example	audio_vol_up audio_vol_dn

audio_vol_up [v] and audio_vol_dn [v]

Audio Volume Up/Down. This command pair is used to increment (audio_vol_up) or decrement (audio_vol_dn) the current error beeper volume by "v" levels.

Min. Abbr.	audio_vol_u audio_vol_d
Argument	v <NR1>, 1, 2, 3, or 4
Example	audio_vol_up 2 audio_vol_dn 2

Misc. Analyzer Commands

date ["yyyy-mm-dd"]

Date. Sets the current date in year-month-day format. Note that the argument is a quoted character string.

Min. Abbr.	date	
Arguments	yyyy	year (NOTE: may be above 2000)
	mm	month (1, 2, ..., 12)
	dd	day (1, 2, ..., 31)
Example	date "2001-03-21"	

date?

Date Query. Returns a quoted string that indicates the current date setup of the Analyzer in year-month-day format.

Min. Abbr.	date?	
Returns	<qstring>	
Example	date?	(command)
	DATE "2001-03-02"	(response)

time [s]

Time. Used to set the instrument's time of day clock.

Min. Abbr.	ti	
Arguments	s	<qstring>, in the format "hh:mm:ss". where hh = hours (00 ... 23), mm = minutes (00 ... 59), and ss = seconds (00 ... 59).
Examples	time 16:30:02	

time?

Time Query. Returns a quoted string indicating the current setting of the instrument's time of day clock.

Min. Abbr.	ti?	
Returns	<qstring>	
Example	time?	(command)
	TIME "16:30:11.45"	(response)

128K Option Commands

The following section identifies commands that are modified or added when the 128K Option is installed.

Modified Commands

When the 128K Option is installed, the All_mem command will operate as before except that it will not return any saved word patterns.

Replaced Commands

The standard *gigaBERT700* Generator and Analyzer command set includes the following "word" commands:

- word_bits
- word_memory
- word_length
- word_mem_len

These commands are limited to creating and editing *short* word patterns, that is patterns that are 8 or 16 bits in length. They will not work on long word patterns. Instead, long word editing functions are performed using "byte" commands, which are added as part of the 128K Option. Moreover, byte commands also work on short words. Therefore, "word" commands have limited application in instruments equipped with the 128K Option.

However, "word" commands will still function in units equipped with the 128K Option. This insures that a Generator or Analyzer equipped with the 128K Option can replace a standard unit in automated applications designed to use standard (short word) commands.

New Commands

When the 128K Option is installed all of the following commands are added to the Generator and Analyzer command sets except for the byte_sync command, which is added to only the Analyzer command set.

The following general rules apply to new 128K commands:

1. Commands used to edit long words execute properly only when received after an edit_begin command and before an edit_end command. These include:
   - byte_length
   - byte_fill
   - byte_block
   - byte_edit

- ❑ byte_insert
- ❑ byte_delete

2. If a command includes a bit address argument [a], then [a] must be less than the length, which can be specified by the byte_length command.

byte_block [a], [i], [b1], ..., [bn]

Byte Block. This command overwrites a block of **i** bits in the edit pattern, beginning at address **a**, with the overwrite pattern indicated by bytes **b1** through **bn**.

Min. Abbr.	byte_b	
Arguments	a	<NR1>, in the range 0 to 16,383, the starting address of the overwrite block.
	i	<NR1>, in the range 1 to 80, the number of bits to overwrite.
	b1, ..., bn	<non-decimal numeric(s)> Indicating the bytes that make up the overwrite pattern. Each byte may be in the range #H00 to #HFF (hex), #Q000 to #Q377 (octal), or #B00000000 to #B11111111 (binary).
Example	byte_block 4096, 24, #HBB, #H10, #HFF	

byte_block? [a]

Byte Block Query. Returns the hex., octal, or binary representation of the 80 bit section of the edit pattern beginning with the bit at address **a**. Note that if there is no editing session in progress, this command will return the indicated 80 bit section from the current word pattern.

Min. Abbr.	byte_b?
Response	[a], [i], [b1], ..., [b2] in format: <NR1>, <NR1>, <non-dec. numeric(s)>
Example	byte_block? 500 BYTE_BLOCK 500, 16, #H12, #HF1

☑ **NOTE**: If address [a] is within 10 bytes of the end of the pattern, then less than 10 bytes will be returned. Also, if the last byte of the pattern is included in the requested block, and this byte contains one or more unused bits, then these bits will be returned with a value of 0.

byte_delete [a], [i]

Byte Delete. This command deletes **i** bits from the edit pattern starting with bit **a**.

Min. Abbr. byte_d

Arguments

a <NR1>, in the range 0 to 16,383, the block of bits to be deleted begins at this address.

i <NR1>, in the range 8 to 80, in steps of 8, this is the number of bits to delete.

Example byte_delete 512, 80

byte_edit [a], [b1]

Byte Edit. This command is similar to byte_block except that it can overwrite (edit) only one byte at a time. The command overwrites 8 bits starting at address **a**.

Min. Abbr. byte_e

Arguments

a <NR1>, in the range 0 to 16383, the address of the overwrite byte.

b1 <non-decimal numeric> indicates the overwrite byte pattern. May be in the range #H00 to #HFF (hex), #Q000 to #Q377 (octal), or #B00000000 to #B11111111 (binary).

Example byte_edit 1000, #Q320

byte_edit? [a]

Byte Edit Query. Returns the hex., octal, or binary representation of the 8-bit section of the edit pattern at address **a**.

Note that if there is no editing session in progress, this command will return the indicated byte from the current word pattern.

Min. Abbr. byte_e?

Response [a], [b1] in the format <NR1>, <non-decimal numeric>

Example

byte_edit?	(command)
BYTE_EDIT 500, #H12	(response)

☑ **NOTE**: If the returned byte is the last byte, and if this byte contains one or more unused bits, then these bits will be returned with a value of 0.

byte_fill [i], [b1], [b2], ..., [bn]

Byte Fill. This command fills the entire edit pattern with a repeating **i**-bit pattern, b1, b2, b3, ..., bn.

Min. Abbr. byte_f

Arguments

i <NR1>, in the range 8 to 80, in steps of 8, indicates the number of bits in the fill pattern.

b1, ..., bn <non-decimal numeric(s)> indicating the contents of the fill pattern. Each byte may be in the range: #H00 to #HFF (hex), #Q000 to #Q377 (octal), or #B00000000 to #B11111111 (binary).

Example byte_fill 16, #HAA, #HFF

byte_insert [a], [i], [b1], ..., [bn]

Byte Insert. This command inserts a pattern of length **i**, bits, starting at address **a** in the edit pattern. The insert pattern is indicated by bytes **b1**, ..., **bn**.

Min. Abbr. byte_i

Arguments

a <NR1>, in the range 0 to 16,383, the insert pattern will be inserted at this address.

i <NR1>, in the range 8 to 80, in steps of 8, the number of bits to insert.

b1, ..., bn <non-decimal numeric(s)> Indicating the bytes that make up the insert pattern. Each byte may be in the range #H00 to #HFF (hex), #Q000 to #Q377 (octal), or #B00000000 to #B11111111 (binary).

Example byte_insert 1600, 32, #HFF, #HFF, #H00, #H00
(inserts the sequence FFFF0000 hex into the edit
pattern at address 1600, and increments
the edit pattern length by four bytes).

byte_length [m], [n]

Byte Length. This command sets the length of the edit pattern to **m** bytes plus **n** bits.

Min. Abbr. byte_l

Arguments
m <NR1>, in the range 0 to 16384.
n <NR1>, in the range 0 to 7.

Example byte_length 16384, 0

☑ **NOTE**: If the number of whole bytes (m) is greater than 4096, then the number of added bits (n) must be set to 0.

byte_length?

Byte Length Query. Returns the current length of the edit pattern in terms of whole bytes plus up to seven additional bits. Note that if there is no editing session in progress, this command will return the length of the current word pattern.

Min. Abbr. byte_l?

Returns <NR1>, <NR1>, indicating the number of bytes and the number of additional bits.

Example

byte_length?	(command)
BYTE_LENGTH 100, 5	(response indicating an edit pattern length of 805 bits)

byte_sync [n] (Analyzer only)

Byte Synchronization. This command sets the long-word pattern synchronization threshold. This threshold does not apply to short-word patterns, or PRBS patterns. The long-word synchronization threshold is set in terms of an integer, n, which corresponds to a BER threshold as explained in Table 5-2.

Min. Abbr. byte_s

Arguments
i <NR1>, in the range 1 (highest BER) to 9 (lowest BER).

Example byte_sync 4

☑ **NOTE**: This command is found in the Analyzer command set only.

byte_sync? (Analyzer only)

Byte Synchronization Query. Returns a single decimal digit which represents the current long-word synchronization threshold, as explained in Table 5-2.

Min. Abbr. byte_s?

Returns <NR1>

Example byte_sync?
BYTE_SYNC 4

edit_begin [n]

Edit Begin. You must issue this command to the instrument before starting an editing session. In effect this command loads the contents of a word memory location specified by **n** into a scratch pad memory location. Once in the scratch pad memory it can be edited, uploaded to the controller, or saved to the same or a different memory location. You also must issue the edit_begin command before downloading a word pattern to the instrument.

Min. Abbr. edit_b

Arguments n <NR1>, a decimal number in the range -1 to + 7, where -1 indicates the current word pattern and 0 through 7 indicate a saved word pattern.

Example edit_begin 2

edit_cntrl?

Edit Control Query. This command returns a character string that indicates whether or not a long-word (128K Option) editing session is in progress and if that session is under local or remote control.

Min. Abbr. edit_c

Returns [local | remote | none], where:

local: indicates a long-word editing session is in progress under local (front panel) control

	remote:	indicates a long-word editing session is in progress under remote (RS-232C or GPIB) control
	none:	indicates that there is no long-word editing session in progress
Example	edit_cntrl?	(command)
	EDIT_CNTRL NONE	(response)

edit_end [n]

Edit End. You **must** issue this command to finish a 128K word editing session. This command either moves the edited pattern from scratchpad memory to the current word location, or saves the edited pattern into one of the instruments eight word memory locations. You can also use this command to discard the edit pattern.

Min. Abbr.	edit_e	
Arguments	n	<NR1>, a decimal number in the range -2 to + 7, where -2 discards the edited pattern, -1 copies the edited pattern to the current word location, and 0 through 7 saves the edited pattern to the indicated memory location.
Example	edit_end -1	

psync [a]

Pattern Synchronization. This command is used to set the location of the pattern synchronization pulse generated by the PSYNC output to a given byte location [a] in the active word pattern.

Min. Abbr.	ps	
Arguments	a	<NR1>, in the range 0 to 16383
Example	psync 0	

psync?

Pattern Synchronization Query. Returns the current byte location of the psync pulse.

Min. Abbr.	ps?
Returns	<NR1>

Example psync?
PSYNC 0

recall_mark [m1_8|m1_4|m1_2|m3_4|m7_8]

Recall Mark Density Pattern. This command recalls a selected mark (pulse) density pattern from PROM and makes it the current word and the active pattern.

Min. Abbr.	recall_mark	
Arguments	M1_8	1/8 (12.5%) mark density pattern
	M1_4	1/4 (25%) mark density pattern
	M1_2	1/2 (50%) mark density pattern
	M3_4	3/4 (75%) mark density pattern
	M7_8	7/8 (87.5%) mark density pattern
Example	recall_mark m7_8	

recall_prom [n]

Recall PROM. This command is used to recall a word pattern from optional PROM (programmable read-only memory). Up to 10 custom patterns may be specified by the customer and loaded into *gigaBERT700* PROM at the factory. Please contact Tektronix Customer Service for additional information on this option.

Min. Abbr.	recall_p	
Arguments	**n**	<NR1>, in the range 0 to 9, this is the address of the word pattern to recall from PROM.
Example	recall_prom 4	

Specifications

This appendix lists *gigaBERT700* Generator and Analyzer specifications.

Generator Specifications

Internal Clock Source

Frequency range	150 kHz to 705 MHz
Resolution	1 kHz
Stability	10 ppm
Number of frequency memories	10

External Clock Input

Frequency range	DC to 705 MHz
Input level	500 mV to 1.4 V p-p
Impedance	50 ohms, AC-coupled
Connector	SMA

Data Outputs

Amplitude	variable, 500 mV to 2.0 V in 50 mV steps
Baseline offset	variable, -2.0 V to +1.8 V, in 50 mV steps
Pulse top limit	+2.8 V into 50 ohms
	+5.6 V into an open load
Rise/fall times (20 to 80%)	150 ps (typical) when amplitude equals 1 V
Jitter	100 ps p-p max., referenced to EXT CLK
Source impedance	50 ohms
Output timing	CLOCK and DATA are edge aligned, ± 100 ps
Connectors	SMA
Data Inhibit	rear-panel SMA, ECL (50 ohms to -2 V term.)
Data inhibit rate	asynchronous, 1 bit + 500 ps minimum width
Data invert	front panel select

Clock Outputs

Format	true and compliment
Amplitude	variable, 500 mV to 2.0 V, in 50 mV steps
Baseline offset	variable, -2.0 V to +1.8 V, in 50 mV steps
Pulse top limit	+2.8 V into 50 ohms
	+5.6 V into an open load
Rise/fall times (20 to 80%)	200 ps (typical) when amplitude equals 1 V.
Jitter	100 ps p-p max., referenced to EXT CLK
Source impedance	50 ohms
Connectors	SMA

Error Injection

Internal rates	single or 1E-n, n = 4, 5, 6, or 7
External error input	ECL, 50 ohms to -2V, 1 error per rising edge
External injection rate	50 ns minimum pulse width
External error connector	SMA

Auxiliary Outputs (Clock/4, Pattern Sync)

Level	200 mV p-p into 50 ohms, 400 mV into high impedance
Impedance	50 ohms
Clock/4 output	system clock / 4, toggles on rising edge of system clock
Pattern sync. pulse (PRBS)	high for 1 bit per frame
Pattern sync. pulse (16 bit words)	low for first byte, high for second byte, etc.
Pattern sync. pulse (long-words)	high for one byte each frame; location is user-programmable
Connectors	SMA

RS-232C and GPIB Interfaces

Controlled functions	all front panel functions except PANEL LOCK and POWER.
Read-back functions	all results and all settings except for PANEL LOCK
GPIB terminator character	LF (line feed) = 0A hex
GPIB address	Front panel select 0 - 30

AC Power Requirements

Voltage range	90 to 250 VAC, auto-ranging
Frequency range	47 to 63 Hz
Power	125 VA max.
Fuse rating	115 VAC, 2 A, or 230 VAC, 1 A
Operating temperature range	0 to 50 degrees C

Mechanical

Weight	10 Kg (22 lb.)
Size	152H x 366W x 340D mm (6" x 14.4" x 13.4")

Analyzer Specifications

Clock Inputs

Format	Differential or single-ended
Frequency range	150 kHz to 705 MHz
Input level	500 mV to 6.0 V p-p
Input threshold	variable, -3.00 V to +4.50 V, in 50 mV steps
Impedance	50 ohms
Termination voltage	selectable, GND, -2 V, +3 V, or AC

Data Inputs

Format	NRZ-L, true or inverted, differential or single-ended
Input threshold	variable, -3.0 V to + 4.5 V in 50 mV steps
Input amplitude	500 mV to 6.0 V p-p
Termination voltage	selectable, GND, -2 V, +3 V, or AC
Impedance	50 ohms
Delay relative to clock	variable: 0 to 4.00 ns in 20 ps steps
Connectors	SMA

Reference Data Input

Format	NRZ-L true
Input threshold	variable: -2.0 V to +1.0 V in 50 mV steps
Input amplitude	500 mV to 6.0 V p-p
Termination voltage	selectable: GND, -2 V, +3 V, or AC
Impedance	50 ohms
Delay relative to clock	variable: 0 to 4.00 ns in 20 ps steps
Connector	SMA

Auxiliary Monitor Outputs (Data, Clock, and PSYNC)

Amplitude	250 mV p-p into 50 ohms, 500 mV into a high impedance
Output impedance	50 ohms
Data monitor	Latched input data
Clock monitor	Buffered input clock
Pattern sync.	1 bit-wide pulse per frame
Error inhibit	Rear-panel, ECL
Error Output	Real-panel, ECL
Connectors	SMA

Auto_Search and Pattern Synchronization

Auto-Search. When Auto_Search is on (enabled) the Analyzer automatically sets input Data Threshold, input Data Delay (relative to clock input signal), input pattern (PRBS or 8/16 bit word pattern), and data polarity (inverted or non-inverted). When Auto_Search is off (disabled) set up of these parameters is manual.

(Pattern) Synchronization Disable. When Sync. Disable is off, the Analyzer will try to re-synchronize the pattern detector when BER goes above the current synchronization threshold by looking for a new pattern frame alignment. When Sync Disable is on, this process is disabled.

Synchronization Thresholds

PRBS patterns	25% (1024 errors/4096 bits)
Word patterns (8/16 bit)	3.1% (128 errors/4096 bits)
Word patterns (128K option installed)	programmable (See Table A-1)

Table A-1 Synchronization Thresholds With 128K Option Installed

Sync. Level	BER	Errors/bits
1	3.1E-2	256/8192
2	7.8E-3	256/32768
3	1.9E-3	256/131072
4	9.7E-4	256/262144
5	4.8E-4	256/524288
6	2.4E-4	256/1048576
7	1.2E-4	256/2097152
8	6.1E-5	256/4194304
9	3.0E-5	256/8388608

Measurements

BER - three simultaneous: Totalize, Window, and Test, displayed as 9.9E-01 to <1.0E-16

Total bit errors - three simultaneous: Totalize, Window, and Test, displayed as 0 to 99999999

Totalize mode - BER/bit errors since last power-on or clear

Window mode - BER/bit errors over a sliding window. Programmable in terms of time (1 sec - 24 Hrs) or bits (1.0E+8 to 1.0E+16).

Test mode- BER/bit errors and other measurements over untimed, timed (1 sec - 24 Hrs) or repeat intervals.

Additional Test Mode Measurements - Includes: ES, EFS, TES, SES, DM, US, and LOS (See Chapter 5).

Frequency - Input clock frequency, 10 kHz resolution

History indicators - (Pattern) Sync. Loss, Bit Error, Phase Error, Power (Loss).

RS-232C and GPIB Interfaces

Controlled functions - all front panel functions except PANEL LOCK and POWER.

Read-back functions - all results and all settings except for PANEL LOCK

GPIB terminator character - LF (line feed) = 0A hex

GPIB address - Front panel select 0 - 30

Printer (Parallel) Interface

Format - Parallel; compatible with parallel (LPT:) ports on ISA personal computers.

Reports - Analyzer Settings, End-of-Test, On-Error, End-of-Window, On Demand Test Summaries (See Chapter 5 for details).

AC Power Requirements

Voltage range - 90 to 250 VAC, auto-ranging

Frequency range - 47 to 63 Hz

Power - 125 VA max.

Fuse rating - 115 VAC, 4 A, or 230 VAC, 2 A

Operating temperature range - 0 to 50 degrees C

Mechanical

Weight - 10 Kg (22 lb.)

Size - 152H x 366W x 340D mm (6" x 14.4" x 13.4")

Low Voltage Declaration

Category	**Standard**
EC Declaration of Conformity - Low Voltage	Compliance was demonstrated to the following specification as listed in the Official Journal of the European Communities: EC Council Directive 89/336/EC Low Voltage Directive 73/23/EEC EN61010-1/A1 - Safety Requirements for Electrical Equipment for Measurement, Control, and Laboratory Use.

Pattern Specifications (Generator and Analyzer)

Data Patterns

Format - NRZ-L, normal and compliment

PRBS patterns - 2^n-1, n = 7, 15, 17, 20, 23

Word pattern length - 16 bits (128 K bits optional)

Word pattern bit order - LSB or MSB first

Number of word pattern memories - 8, plus the current word

PRBS Pattern Phase Tap Information

The PRBS patterns used in the *gigaBERT700* Generator and Analyzer are generated by a shift-register and exclusive OR feedback technique. The pattern is dependent on which feedback taps (shift register outputs) are selected.

For example, PN7 is defined to be a seven-stage shift register, with the output of stages 6 and 7 fed back (through an exclusive OR gate) to the input of stage one of the shift register. The feedback taps used in *gigaBERT700* Generator and Analyzer PRBS circuits are listed below:

Pattern	**Feedback Taps**
PN 7	6 and 7
PN15	14 and 15
PN17	14 and 17
PN20	17 and 20
PN23	18 and 23

Default Settings

This appendix lists factory default settings for the *gigaBERT700* Generator and Analyzer.

How to Recall Factory Default Settings

Using Front Panel Controls

Use the following procedure to recall the factory default settings of the Generator or Analyzer using front panel controls:

1. Turn instrument power off.
2. While holding down the VIEW ANGLE, MSB 1, and (PATTERN) CLEAR keys simultaneously, turn instrument power back on.
3. *After* you see the message **Default Settings** appear in the display, release the three keys. In a few seconds the normal display format will appear and the instrument will be in its default setup.

Via Remote Control

To return the Generator or Analyzer to its factory default settings via remote control, issue the ***rst** command. Note that this command also returns the instrument to the Operation Complete Command Idle State and the Operation Complete Query Idle State.

Functions Shared by Generator and Analyzer

Data Pattern (Standard)

Current PRBS pattern.....PN 7 (2^7-1)

Current word length .....16 bits

Current word pattern.....AA 55

Word memories (0 through 7).....same as current word

Active pattern.....PRBS

Data Invert .....off

Word Order .....LSB first

Data Pattern (128K Option)

Current word length .....8 bytes

Current word pattern.....AA55A55AAA55A55A

Word memories (0 through 7).....same as current word

Pattern Sync. pulse 0

Synchronization threshold (Analyzer only) 1

Remote Interfaces

Remote mode.....local

Remote header.....on

GPIB address (Generator) 15

GPIB address (Analyzer).....14

GPIB terminator.....EOI/LF

GPIB bus.....talk/listen

RS-232C prompt.....BERT700>

RS-232C baud rate.....9600

RS-232C parity.....even

RS-232C data size .....8 bits

RS-232C EOL .....CR/LF

RS-232C XON/XOFF .....on

RS-232C echo.....on

RS-232C prompt line feed .....off

View Angle and Panel Lock

View Angle 0

Panel Lock .....off

Generator Factory Default Settings

Clock Source and Frequency

External Clock mode.....INT, GND termination

Frequency (current) .....705.000 MHz

Frequency memories (0 through 9) .....705.000 MHz

Frequency step size.....100.000 MHz

Clock and Data Outputs

Output clock amplitude.....1.50 volts

Clock baseline offset .....-0.75 volts

Output data amplitude.....1.50 volts

Data baseline offset.....-0.75 volts

Error injection rate.....off

Analyzer Factory Default Settings

Clock, Data, and Reference Data Inputs

Input data delay.....0 ps *

Input data threshold.....0.00 volts *

Input clock threshold .....0.00 volts *

Input clock mode .....single ended

Input data mode.....single ended

Reference data delay.....0 ps

Reference data threshold.....-1.50 volts

Input data termination.....GND

Input clock termination.....GND

Reference data termination.....GND

Reference data mode.....off

* *The instrument may change these settings automatically if the Auto_Search feature is enabled.*

Auto_Search/Pattern Synchronization

Auto_Search mode.....on

Synchronization disable.....off

Error display select mode .....Totalize

Error Beeper

Audio volume .....0 (off)

Audio error rate threshold.....1E-3

Time and Date

Date 1-1-1990

Time.....00:00:00.0

Printer

Port.....parallel

Print enable.....on

Window Measurement Process

Mode.....bits

Bits .....1.0E+9

Seconds 1

End-of-Window reports .....off

Test Measurement Process

Test mode .....timed

Timed test interval.....00:00:30

Test reports.....ON ERROR

On-Error squelch.....off

Error threshold.....1E-5

Test report status.....previous

Test state .....stop

Options

This appendix explains the options available with your *gigaBERT700* Generator and Analyzer.

OPTIONS 1R, 1T —Rack Mount.

This option adds the rack mount assembly to the analyzer and generator.

OPTIONS 2A, 2R, 2T —75 ohm Impedance.

This option changes the nominal impedance of the following *gigaBERT700* inputs and outputs from the standard 50 ohms to 75 ohms:

Analyzer: DATA, DATA-BAR, CLOCK, CLOCK-BAR.

Generator: DATA, DATA-BAR, CLOCK, CLOCK-BAR.

The nominal impedance of all other signal inputs and outputs remains 50 ohms.

OPTION 4S

This option adds the pattern editor software.

p

Customer Acceptance Test
For
gigaBERT700 Generator & Analyzer

NOTICE TO ALL PERSONS RECEIVING THIS DOCUMENT
THIS DOCUMENT IS ONLY CONDITIONALLY ISSUED, AND NEITHER RECEIPT NOR POSSESSION THEREOF CONFERS OR TRANSFERS ANY RIGHT IN, OR LICENSE TO USE, THE SUBJECT MATTER OF THE DOCUMENT OR ANY DESIGN OR TECHNICAL INFORMATION SHOWN THEREON, NOR ANY RIGHT TO REPRODUCE THIS DOCUMENT OR ANY PART THEREOF, EXCEPT FOR MANUFACTURE BY VENDORS FOR TEKTRONIX AND FOR MANUFACTURE UNDER THE CORPORATION'S WRITTEN LICENSE, NO RIGHT TO REPRODUCE THE DOCUMENT IS GRANTED UNLESS BY WRITTEN AGREEMENT WITH OR WRITTEN PERMISSION FROM THE CORPORATION.

Performance Verification

The following tests verify that the gigaBERT700 Generator & Analyzer achieve their specified performance. These instruments are not user-adjustable. If the gigaBERT700 needs repair, return it to Tektronix.

Recommended Test Equipment
The recommended test equipment needed to verify performance is listed below.

Description	Specification
gigaBERT700 Generator	
gigaBERT700 Analyzer	
Coaxial SMA cables	equal length
Standard Instrument	six each 50 ohm
75 ohm option	four each 75 ohm, two each 50 ohm

Functional Test

To functionally test the gigaBERT700, connect the Generator to the Analyzer and confirm their correct operation as described below.

Note

In these procedures, the Generator and Analyzer are returned to their default settings. The word memories will be reset. If you have entered word patterns that you do not want to lose, use a GPIB or RS-232C controller to save them before beginning these procedures.

- ❑ **Step 1:** Make connections appropriate to the options installed as follows:

Connections for Functional Test

Option	From	To	Comment
Standard Instrument	TX Clock	RX Clock	50 ohm, SMA coax
	TX Not Clock	RX Not Clock	50 ohm, SMA coax
	TX Data	RX Data	50 ohm, SMA coax
	TX Not Data	RX Not Data	50 ohm, SMA coax
75 ohm Option	TX Clock	RX Clock	75 ohm, SMA coax[1]
	TX Not Clock	RX Not Clock	75 ohm, SMA coax[1]
	TX Data	RX Data	75 ohm, SMA coax[1]
	TX Not Data	RX Not Data	75 ohm, SMA coax[1]

[1] This may be accomplished by using SMA to BNC adapters and 75 ohm BNC coaxial cables.

See Figure 1 for Setup of Functional Test.

- ❑ **Step 2:** Reset both the Generator and Analyzer to their factory default settings. Press the 'CLEAR' key in the PATTERN section, the 'MSB(1)' key and the 'VIEW ANGLE' key, and hold down all three keys while cycling the power.

The message DEFAULT SETTINGS should appear briefly on the display of each unit, followed by the gigaBERT700 logo, before the functional display appears.

- ❑ **Step 3:** At the Generator, verify that error injection is off (you should see ERR OFF on the display). If error injection is on, press the 'SINGLE' key in the ERROR INJECT section to turn it off.

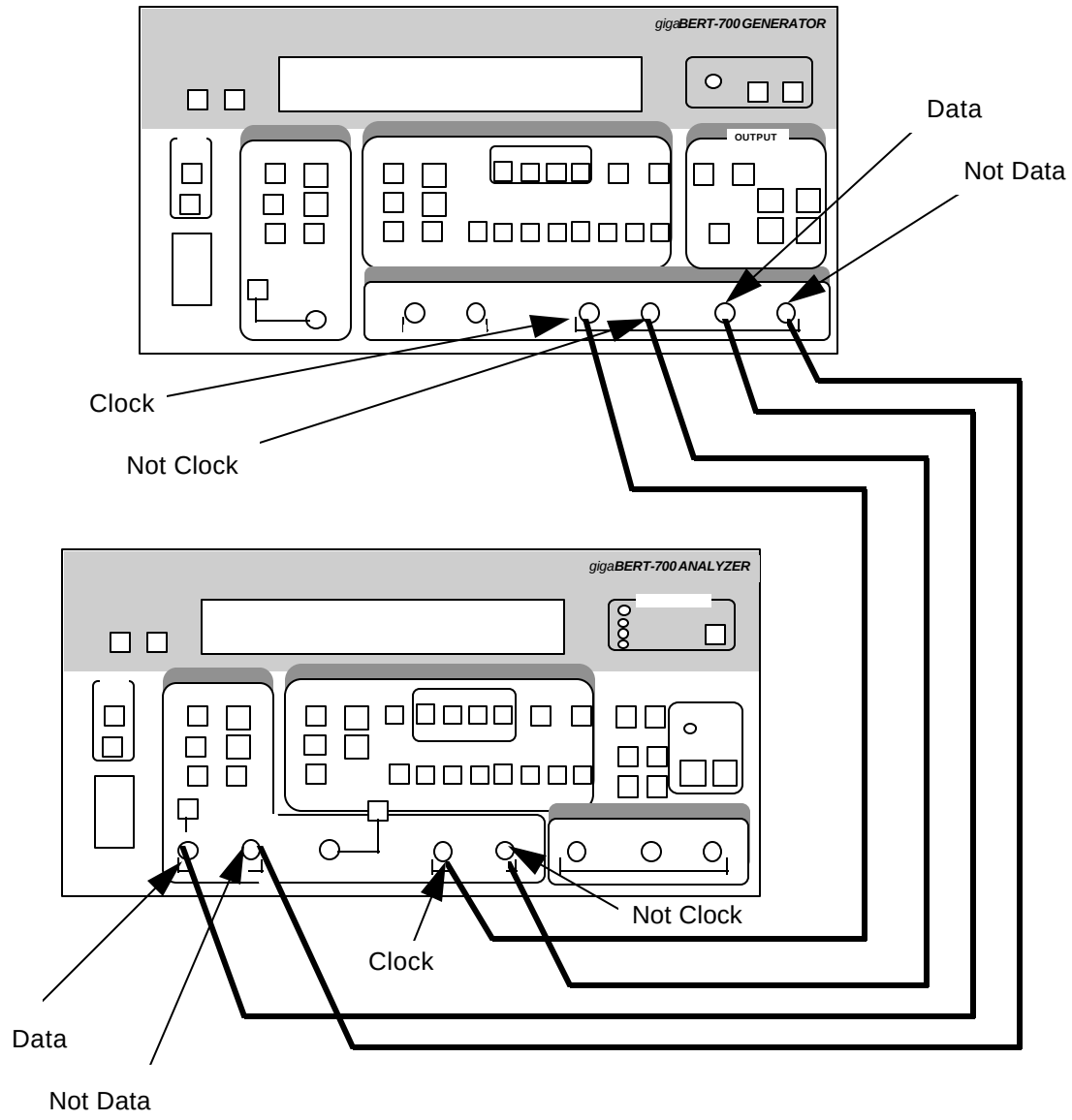

Figure 1 -- Setup for Functional Test of Standard Instrument

- ❑ **Step 4:** At the Generator, verify that PRBS is selected (the PRBS LED light, in the PATTERN, section, should be on.) If not, press the 'PRBS' key to select it.
- ❑ **Step 5:** At the Analyzer, press the 'CLEAR' key in the ERROR DETECTION section and the 'CLEAR' key in the ERROR HISTORY section to clear the error display and the error history LED lights. All four history LEDs should be off.

Because the Analyzer defaults to Autosearch mode, the Analyzer and the Generator are now linked and synchronized. The following checks will confirm the functionality of the units.

Confirmation of Frequency Function

- ❑ **Step 6**: In the Generator CLOCK section, the FREQUENCY LED should be on. If it is not, press the 'FREQUENCY' key to select it.
- ❑ **Step 7:** Use the Generator CLOCK up/down keys to change the output frequency.
- ❑ **Step 8:** Check that the frequency displayed by the Analyzer matches the Generator output to within ± 0.1 MHz. (Note that the resolution of the Analyzer is 0.01 MHz and that the resolution of the Generator is 0.001 MHz.
- ❑ **Step 9:** At the Generator, use the 'STEP' key to select another frequency step size (note the placement of the underscore on the Generator frequency display), and repeat steps 7 and 8 at this step size.
- ❑ **Step 10:** Repeat steps 7 through 9 for all step sizes.

Confirmation of Selectable Data Patterns

- ❑ **Step 11:** In the Generator PATTERN section, verify that the PRBS LED light is on. If not, press the PRBS key to select it.
- ❑ **Step 12:** Press the Generator PATTERN up/down keys to select PRBS pattern PN7.
- ❑ **Step 13:** Verify that the Analyzer displays the same PRBS pattern as the Generator.
- ❑ **Step 14:** At the Analyzer, press the 'CLEAR' key in the ERROR HISTORY section.
- ❑ **Step 15:** Verify that the four ERROR HISTORY LEDs are off and stay off.
- ❑ **Step 16**: At the Generator, use the PATTERN up/down keys to select the next PRBS pattern.
- ❑ **Step 17:** Repeat steps 13 through 16 for each of the five PRBS patterns.
- ❑ **Step 18:** In the Generator OUTPUT section, press the 'INVERT DATA' key. The INVERT DATA LED will light.
- ❑ **Step 19:** Verify that the INVERT DATA LED in the Analyzer INPUT section is also on.
- ❑ **Step 20**: Repeat steps 12 through 17, noting that INV is displayed after the PRBS pattern on the Analyzer display.

Confirmation of Generator Output Data Level Change

In this part of the functional test procedure, you will verify that the Analyzer threshold responds correctly to the sample values of baseline offset and amplitude in the Generator output. The sample values and threshold limits are summarized in the following Data Levels table. Repeat steps 21 through 27 for each row of the Data Levels table.

Note

Values in the following table are repeated; the purpose of this test is to determine that the gigaBERT700 responds correctly to changes in data level. You do not need to read the results except at Step 26.

Data Levels

Generator Baseline Offset	Generator Amplitude	Analyzer Threshold Limits
–1.00	1.00	–0.70 to –0.30
0.00	1.00	0.30 to 0.70
–1.00	2.00	–0.20 to 0.20

- ❑ **Step 21**: In the Generator OUTPUT section, the DATA LED should be on. If not, press the 'DATA' key. The INVERT DATA LED should be off. If it is not, press the key to turn it off.
- ❑ **Step 22:** Use the Generator BASELINE OFFSET up/down keys to set the baseline offset value shown in the Generator Baseline Offset column of the Data Levels table.
- ❑ **Step 23:** Use the AMPLITUDE up/down keys to set the amplitude to the value shown in the Generator Amplitude column of the Data Levels table.
- ❑ **Step 24:** At the Generator, select another PRBS pattern (using the PATTERN up/down keys) to initiate a resynchronization by the Analyzer.
- ❑ **Step 25:** Select the PRBS pattern PN7.
- ❑ **Step 26:** At the Analyzer, verify that once the green LOCK LED in the SYNC section lights, the displayed threshold is between the limits shown in the Analyzer Threshold Limits column of the Data Levels table. Cycle through all five PRBS patterns (PN7, PN15, PN17, PN20, and PN23) and verify that the Analyzer synchronizes on each pattern.
- ❑ **Step 27:** At the Analyzer, press the CLEAR button in the ERROR HISTORY section to ensure than the SYNC LOSS LED is off.

Confirmation of Error Injection Rates

- ❑ **Step 28:** In the Analyzer ERROR DETECTION section, press the 'DISPLAY SELECT' key until there is an ∞ (infinity) symbol on the display preceding the error rate.
- ❑ **Step 29:** At the Analyzer, press the 'CLEAR' key in the ERROR HISTORY section, and press the 'CLEAR' key in the ERROR DETECTION section to clear the history LEDs and error rate display.
- ❑ **Step 30:** In the Generator ERROR INJECTION section, press the 'SINGLE' key and confirm on the Analyzer the BIT LED (in the ERROR HISTORY section) lights and that the displayed error total increases by one each time you press the 'SINGLE' key. Press this key at least 20 times.

Note

Press the 'SINGLE' key briefly. If you hold it down, the Generator injects errors repeatedly into the data stream.

- ❑ **Step 31:** In the ERROR HISTORY section, press the 'CLEAR' key to clear the history LEDs.
- ❑ **Step 32**: In Generator ERROR INJECTION section, press the 'RATE' key. ERR 1E-7 will appear on the display. The ERROR INJECTION LED should be on steadily.
- ❑ **Step 33:** In the Generator ERROR DETECTION section, press the 'CLEAR' key to clear the totalize error display.
- ❑ **Step 34:** Wait 15 seconds, then confirm that the error rate displayed on the Analyzer matches the Generator injected error rate and that the Analyzer BIT LED in the ERROR HISTORY section is lighted.
- ❑ **Step 35:** In the Generator ERROR INJECTION section, press the 'RATE' key once to select the next error rate.
- ❑ **Step 36:** Repeat steps 33 through 35 until all Generator error rates have been verified and EXT appears on the Generator display. Press the Generator 'ERROR RATE' key once more to turn off error injection.
- ❑ **Step 37:** Look straight at the Generator LCD panel. Depress the VIEW ANGLE button until you see the darkest digits. Change the vertical angle from which you view the display and adjust the clarity by depressing the VIEW ANGLE adjust button. This is to verify that the contrast of the display can be optimized for the user's viewing angle.
- ❑ **Step 38:** Repeat Step 37 for the Analyzer.
- ❑ **Step 39:** Set the Generator and the Analyzer to Factory Default settings. Verify that the Analyzer SYNC LOCK light illuminates. Push the CLEAR key in the ERROR HISTORY section. Record the delay value shown on the display (lower left display area) for later use. De-select AUTOSEARCH on the Analyzer. Press the 'DELAY' key in the input section of the Analyzer. Vary the delay using the 'UP' and 'DOWN' arrow keys in the input section of the Analyzer until the PHASE light in the ERROR HISTORY section illuminates. Manually return the Analyzer delay setting to that recorded above. Verify that the PHASE light can be extinguished by the 'CLEAR' key.

Confirmation of Selectable Analyzer Terminations

- ❑ **Step 40:** Set the Generator and Analyzer to Factory Default Settings. Confirm that the Analyzer F2 LED is not lighted.
- ❑ **Step 41:** Push the Analyzer TERM button and confirm that the LCD displays GND.
- ❑ **Step 42:** Perform the following actions for each termination listed:
    a) Select the Analyzer termination by using the 'UP' and 'DOWN' arrow keys in the INPUT section.
    b) On the Generator, select PN15, wait a few seconds, then select PN7. Use the 'UP' and 'DOWN' arrow keys to select the different PN values.
    c) Wait for the Analyzer LOCK light to come on.
    d) Confirm the Analyzer threshold display falls within the limits shown in the Termination Threshold Limits table.

e) Press F2 on the Analyzer to select CLOCK inputs and confirm that the F2 LED is lighted, and repeat steps a) through d).

Note

The threshold limits listed assume that the Generator is set to default Amplitude and Baseline Offset.

Analyzer Termination Threshold Limits

Analyzer Termination	Analyzer Threshold Limits
50 ohm to GND	0 V ± 100 mV
50 ohm to –2 V	–1.0 V ± 100 mV
50 ohm to +3 V	1.5 V ± 100 mV
AC	0 V ± 100 mV

Confirmation of Differential Operation

- ❑ **Step 43:** Set the Generator and Analyzer to Factory Default Settings.
- ❑ **Step 44:** Push the Analyzer DIFF button and confirm that the LED lights.
- ❑ **Step 45:** Push the Analyzer F2 button and then the DIFF button. Verify that the Analyzer LOCK light illuminates.

Confirmation of Buttons and Indicators

- ❑ **Step 46:** Reset both the Generator and Analyzer by cycling the power.
- ❑ **Step 47:** Verify the following Generator LEDs.

Section	ON	OFF
CLOCK	FREQUENCY	RECALL SAVE EXT
PATTERN	PRBS	WORD RECALL SAVE WORD LENGTH F1 - F4 Bits 1 - 8
OUTPUT	DATA	CLOCK INVERT DATA
ERROR INJECT		RATE
Left Side		PANEL LOCK GPIB ADDR LOCAL

- ❑ **Step 48:** Verify the Generator LEDs and buttons operate by toggling the following buttons and observing the LEDs turn ON and OFF.

Section	LED/Button	Indicator
Left Side	PANEL LOCK GPIB ADDR	ON - OFF ON - OFF

- ❑ **Step 49:** Verify the Analyzer LEDs and buttons operate by toggling the following buttons and observing the LEDs turn ON and OFF.

Section	LED/Button	Indicator
Left Side	PANEL LOCK ADDR	ON - OFF ON - OFF

Cleaning Instructions

Clean the GB700 often enough to prevent dust and dirt from accumulating. Dirt acts as a thermal insulator, preventing effective heat dissipation, and can also provide high-resistance leakage paths between conductors or components in a humid environment.

Cleaning the Exterior

Clean the dust from the outside of the instrument with a soft, clean cloth or small brush. A brush is especially useful for removing dust from around the buttons and connectors. Remove hardened dirt with a soft cloth dampened with a mild detergent and water solution. Do not use abrasive cleaners.

Cleaning the CRT

Clean the light filter and CRT face with a soft, lint-free cloth dampened with denatured alcohol. Do not use abrasive cleaners.

Cleaning the Interior

Interior cleaning and maintenance should be performed by qualified service personnel only.

Glossary

Address

A number specifying a particular user device attachment point... The location of a terminal, a peripheral device, a node, or any other unit or component in a network...A set of numbers than uniquely identifies something - a location in computer memory, a packet of data traveling through a network.

Analog-to-Digital Converter

A device that converts an analog signal, that is, a signal in the form of a continuously variable voltage or current, to a digital signal, in the form of bits.

Attenuation

A decrease in magnitude of current, voltage, or power of a signal in transmission between points.

Attenuator

An electronic transducer, either fixed or adjustable, that reduces the amplitude of a wave without causing significant distortion.

Bandwidth

The difference between the limiting frequencies of a continuous frequency spectrum. The range of frequencies handled by a device or system.

BER

An acronym for Bit Error Ratio (or Rate). The principal measure of quality of a digital transmission system. BER is defined as:

BER = Number of Errors/Total Number of Bits

BER is usually expressed as negative exponent. For example, a BER of 10^{-7} means that 1 bit out of 10^{7} bits is in error.

BER Floor

A limiting of the bit-error-ratio (BER) in a digital fiber optic system as a function of received power due to the presence of signal degradation mechanisms or noise.

Binary

A numbering system that allows only two values, zero and one, (0 and 1). Binary is the way most computers store information., in combination of ones and zeros. Voltage on. Voltage off. See also: Bit.

Bit

A binary digit, the smallest element of information in binary system. A 1 or 0 of binary data.

Bit Error

An incorrect bit. Also known as a coding violation.

Bit Rate

The number of bits of data transmitted over a phone line per second.

Byte

A unit of 8 bits.

Channel

A communications path or the signal sent over a channel. Through multiplexing several channels, voice channels can be transmitted over an optical channel.

Clock

1. An electronic component that emits consistent signals that paces a computer's operations. 2. An oscillator-generated signal that provides a timing reference for a transmission link. A clock provides signals used in a transmission system to control the timing of certain functions, such as the duration of signal elements or the sampling rate. It also generates periodic, accurately spaced signals used for such purposes as timing, regulation of the operations of a processor, or generation of interrupts. A clock has two functions: to generate periodic signals for synchronization on a transmission facility, and to provide a time base for the sampling of signal elements. In computers, a clock synchronizes certain procedures, such as communication with other devices.

Error Detection

Checking for errors in data transmission. A calculation is made on the data being sent and the results are sent along with it. The receiving station then performs the same calculation and compares its results with those sent. ...Code in which each data signal conforms to specific rules of construction so that departures from this construction in the received signals can be automatically detected. Any data detected as being in error is either deleted from the data delivered to the destination, with or without an indication that such deletion has taken place, or delivered to the destination together with an indication that is has been detected as being in error.

Error Rate

The ratio of the number of data units in error to the total number of data units.

ES

An acronym for Errored Second. A second with at least one error.

GPIB

A physical layer interface standard for the interconnection of equipment.

Line

The portion of a transmission line between two multiplexers.

LOF

An acronym for Loss of Frame.

LOS

An acronym for Loss of Signal.

Multi-Channel Cable

An optical cable having more than one fiber.

Noise

Unwanted signals that combine with and hence distort the signal intended for transmission and reception.

Residual error rate

The error rate remaining after attempts at correction are made.

RS-232C

A physical layer interface standard for the interconnection of equipment.

Rx, Receiver

An abbreviation for Receiver

A detector and electronic circuitry to change optical signals to electrical signals.

Tx, Transmitter

An abbreviation for Transmitter

A driver and source used to change electrical signals to optical signals.

Index

-A-

Analyzer Functions, 5-1

- Analyzer Error Messages, 5-33
- Audio (Beeper) Function, 5-32
- Automatic Setup Functions (SYNC), 5-2
- Clock, Data, and Reference Data Inputs, 5-7
- Error Detection Set-up, 5-14
- Error History Indicators, 5-31
- Monitor Outputs, 5-13
- Printing Results (Reports), 5-22
- Result Definitions, 5-28
- Starting & Stopping Measurements, 5-34
- Synchronization (LOCK) Threshold, 5-6
- Viewing Results, 5-21

-B-

BERT Basics, 2-2

-C-

Cleaning Instructions, E-1

Common Functions, 3-1

- AC Power, 3-2
- LCD Viewing Angle, 3-4
- Locking the Front Panel, 3-6
- Pattern Definitions, 3-7
- Recalling Default Setup, 3-5
- Selecting (Recalling) a Saved Word, Mark Density or PROM Pattern, 3-9
- Selecting a Pattern, 3-7
- Selecting an Active Pattern, 3-7

Controls & Indicators, 2-16

- Analyzer ERROR DETECTION, 2-20
- Analyzer INPUT, 2-19
- Analyzer SYNC Controls, 2-20
- Generator CLOCK , 2-18
- Generator ERROR INJECT, 2-19
- Generator OUTPUT, 2-18
- GPIB Controls, 2-16
- Pattern Controls and Function Keys, 2-17
- Power Switches, 2-16
- View Angle and Panel Lock Keys, 2-16

Customer Acceptance Test, D-1

-D-

Default Settings, B-1

Display Formats, 2-8

-F-

Figures

- Analyzer Clock and Data Input Equivalent Circuits, 5-7
- Analyzer Display, 2-8
- Analyzer Front & Rear Panels, 2-6
- Analyzer Setup Report, Example, 5-23
- BERT Application, Example, 2-2
- End-of-Test Report, Example, 5-24
- End-of-Window Reports, Example, 5-25
- Generator Clock and Data Output Equivalent Circuits, 4-6
- Generator Display, 2-7
- Generator Front & Rear Panels, 2-5
- Nominal Generator Clock, Data Waveforms showing Amplitude, Baseline Offset and Vtop, 4-6
- Nominal Generator NRZ Data and Clock Output Waveforms, 2-3
- On-Error Reports, Example, 5-26
- Standard Event Status Register (SESR), 7-15
- Status Byte Register (SBR), 7-17
- TEST Measurement Process, 5-17
- Test Status Register (TSR), 7-16
- TOTALIZE Measurement Process, 5-15
- WINDOW Measurements Process, 5-16

Front & Rear Panel Figures, 2-4

-G-

Generator Functions, 4-1

- Clock Source and Frequency, 4-2
- Data and Clock Outputs, 4-5
- Data Inhibit, 4-13
- Error Injection, 4-11
- PYNC and CLOCK/4 Outputs, 4-10

Getting Started, 1-1

Glossary, F-1

-M-

Menus, 6-1

Menu Basics, 6-2

Menu Function Definitions, 6-9

- Date (DATE), 6-38
- External Clock Term. (CLOCK), 6-35
- GPIB, 6-34
- RS-232 Baud Rate (BAUD), 6-28
- RS-232 Data Bits (SIZE), 6-30
- RS-232 Echo (ECHO), 6-33
- RS-232 End-of-Line Char.(EOL), 6-31
- RS-232 Parity (PARITY), 6-29
- RS-232 Xon/Xoff (XON/XOFF), 6-32
- Test Length (LENGTH), 6-16
- Test Mode (MODE), 6-17
- Test Print (PRINT), 6-21
- Test Reports (REPORT), 6-18
- Test Squelch (SQUEL), 6-20
- Test Threshold (THRES), 6-19
- Test View Current (VIEW-CUR), 6-23
- Test View Previous (VIEW-PRE), 6-22
- Time (TIME), 6-39
- Utility Option (OPTION), 6-36
- Utility Version (VER), 6-37

Window Interval in Bits (BITS), 6-25

Window Interval in Hrs:Min:Sec (SECOND), 6-26

Window Mode (MODE), 6-24

Window Reports (REPORT), 6-27

Word Edit (EDIT), 6-10

Word Fill (FILL), 6-12

Word Length (LENGTH), 6-11

Word Order (ORDER), 6-13

Word Sync. Pulse (PSYNC), 6-14

Word Synchronization Threshold (SYNC), 6-15

Menu Overview, 2-22

Menu Summaries, 6-6

-O-

Outputs & Inputs, 2-10

Analyzer INPUT, 2-11

Analyzer MONITOR, 2-12

Analyzer Rear Panel, 2-12

Connectors, Terminations and Levels , 2-14

Generator CLOCK, 2-11

Generator OUTPUT, 2-10

Generator Rear Panel, 2-11

-P-

Printers and External Controllers, Using, 7-1

GPIB Status and Event Reporting System, 7-13

Printer Basics, 7-3

Remote Control Basics, 7-2

Using the GPIB Port, 7-8

Using the RS-232C Port, 7-4

-R-

Remote Commands, 8-1

Command Descriptions, 8-12

Command Summary - Alphabetical , 8-7

-S-

Safety, xii

Self-Check Procedure, Initial, 1-3

Specifications, A-1

-T-

Tables

AC Power Fuse Types, 3-2

Actions taken by Analyzer when Synchronization is Lost, 5-3

Analyzer Inputs & Outputs, 2-15

Analyzer Menu System Overview, 6-7

Command Examples, 7-7

Commands that generate Multi-Unit Responses, 7-5

Data Inhibit Logic, 4-13

External Clock Input Specifications vs. Termination, 4-3

Generator Inputs & Outputs, 2-14

Generator Menu System Overview, 6-8

GPIB Interface Functions, 7-4

How F2, F3 determine Input Set-up , 5-8

How to Tell which Display Mode is Active, 5-18

Input Terminations for CLOCK, DATA, and REF DATA, 5-9

Input Threshold Range as a Function of Termination, 5-11

Mark Density Patterns, 3-8

Menu Descriptions, 6-6

Numeric Response Types, 7-5

Output Setup Rules vs. Termination Impedance, 4-7

PRBS (2N-1) Test Patterns, 3-7

RS-232C (Serial Port) Parameters, 7-4

RS-232C Connector Pin-out, 7-5

RS-232C Port Error Messages, 7-7

SESR Bit Definitions, 7-4

Status Byte Register Bit Definitions, 7-5

Status Registers, Enable Registers, and Related GPIB Commands, 7-7

Symbols, 7-4

Synchronization Threshold, 5-6

Synchronization Thresholds with 128K Option Installed, A-6

Test Status Register Bit Definitions, 7-5

Using F2, F3 to Select Input Set-up, 2-20

-W-

Word Patterns, 3-11

Basics, 3-11

Creating Word Patterns using front panel, 3-12

Creating Word Patterns using menus, 3-13

Creating Word Patterns using remote control, 3-14

Recalling Word Patterns, 3-16

Saving Word Patterns, 3-15